• 15Q0102B10 •

SINUS PENTA

MULTIFUNCTION AC DRIVE

MULTIPUMP APPLICATION

Issued on 11/10/2011
R.06
Software Version 1.68x

English

• This manual is integrant and essential to the product. Carefully read the instructions contained herein as they provide important hints for use and maintenance safety.
• This device is to be used only for the purposes it has been designed to. Other uses should be considered improper and dangerous. The manufacturer is not responsible for possible damages caused by improper, erroneous and irrational uses.
• Elettronica Santerno is responsible for the device in its original setting.
• Any changes to the structure or operating cycle of the device must be performed or authorized by the Engineering Department of Elettronica Santerno.
• Elettronica Santerno assumes no responsibility for the consequences resulting by the use of non-original spare-parts.
• Elettronica Santerno reserves the right to make any technical changes to this manual and to the device without prior notice. If printing errors or similar are detected, the corrections will be included in the new releases of the manual.
• The information contained herein is the property of Elettronica Santerno and cannot be reproduced. Elettronica Santerno enforces its rights on the drawings and catalogues according to the law.

SANTERNO
CARRARO GROUP

Elettronica Santerno S.p.A.
Strada Statale Selice, 47 – 40026 Imola (BO) Italy
Tel. +39 0542 489711 – Fax +39 0542 489722
santerno.com sales@santerno.com

0. TABLE OF CONTENTS

0.1. Chapters

0.2. Figures

0.3. Tables

1. OVERVIEW

The Sinus Penta allows the user to update the firmware which allows the drive to be used in special applications.

The menu tree, the programming mode and navigation mode of the standard Sinus Penta drive are used and when the special firmware is installed, special-purpose parameters or menus will be added/(or removed) whether required/(or not required) for the application.

This manual covers the wiring diagrams and the parameters relating to the Multipump application; for any detail concerning optional control boards and different parameters common to the standard Sinus Penta drive, please refer to the Sinus Penta's Installation Instructions and Programming Instructions manuals.

NOTE

Certain parameters which are used both for the standard Sinus Penta and the Multipump application have different serial link addresses, but this does not affect their functionality, which remains the same. See Table 20.

1.1. The Multipump Application

The Multipump application can be used when two or more pumps/fans (up to 4 slave devices are allowed) are parallel-connected to the same collector or duct.

The Multipump Sinus Penta drive avoids hammer blows in pipes and abrupt variations in pressure which reduce the durability of ductworks, valves, fluid controlling devices, etc.
The Multipump application allows doing the following:

- Adjusting pump delivery, fluid level, pressure, etc., thus controlling the slave pumps based on the demand of the internal PID regulator;
- controlling all slave pumps operating at fixed speed (which are connected to the mains through a contactor or a soft starter) or operating at variable speed;
- balancing the working time of the connected pumps;
- cyclically changing over operating pumps and inactive pumps which are ready to start;
- operating in Multimaster operation which allows two master Multipump Sinus Penta drives to operate and providing dual redundancy should one of the master drives be isolated from the system.

No additional external device is required.

NOTE
Slave pumps at fixed speed

<u>The power ratio of the connected pumps must meet one of the following requirements</u>:

- All pumps must have the same power ratings.
- The connected pumps can have different power ratings, provided that 1) each pump with the greatest power rating is matched with lower-rated pumps that, if combined, have power ratings equal to/higher than the former pump; 2) the power rating of the master pump must be higher than/equal to the power rating of the lower-rated pump.

NOTE
Slave pumps at variable speed

<u>All the connected pumps must have the same power ratings.</u>

2. USING THE SINUS PENTA AS A MULTIPUMP PLANT MANAGER

The SINUS PENTA drives can be used as managers of multiple pump systems (up to 5 connected pumps are allowed). In that case, the Manager drive can operate with slave pumps working at fixed speed (direct starting or starting via a soft starter) or at variable speed (slave pumps controlled by a drive).

A PI(D) regulator integrated into the Master Penta drive configures the operating pumps and their working speed.

Sinus Penta drive operating as a manager of a multiple pump system:

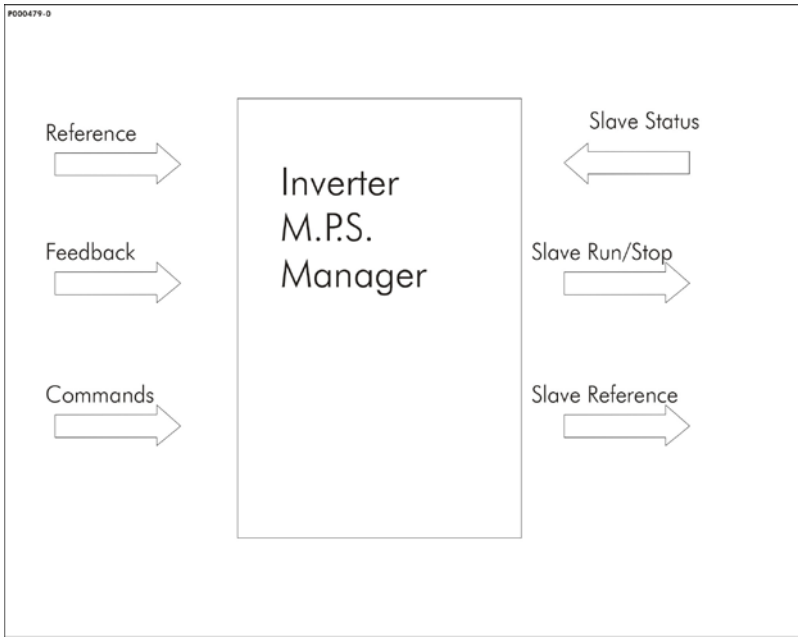

Figure 1: Layout of the Sinus Penta operating as a Multipump drive.

The Manager of the Multipump system collects the reference and the feedback of the variable to be controlled, the system commands (activation, run, stop…), the status of the available slave pumps (the "Inverter OK" signal appears if the slave pumps are controlled via a drive or, if variable-speed pumps are used, via a Normally Connected contact signal of the motor thermal protection or PTC). It also sends the reference for slave pumps controlled via a drive and the start/stop command to the slave pumps. The wiring diagrams for the power wiring and the signal wiring required to manage the four slave pumps both at fixed speed and at variable speed are given in the sections below. **The commands, the operating signals and the enabling signals (digital and analog inputs/outputs) required by the Penta drive used as the Manager of the plant are given in the input/output sections relating to the default settings of the Penta drive, if not stated otherwise (if no indication is given, the default parameters are considered, otherwise the parameters other than default are indicated).**

The operating diagram of the Multipump Penta drive is shown in the figure below. The parameters relating to the Master mode are also given.

NOTE

If the Slave mode is activated, the Penta will not enable the plant Manager (MUP).
Also, the PID output is kept adjusted to the value sent via serial link by the Master drive.

NOTE

If **C179** is set up, the PID reference sources can be selected through the programmed digital input.

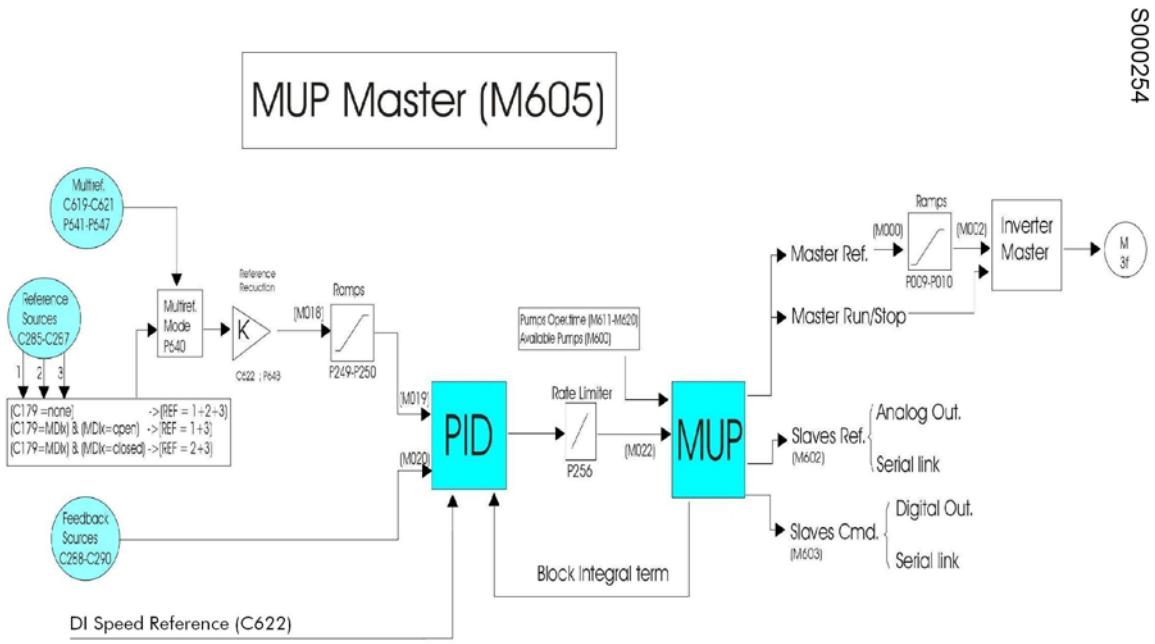

Figure 2: Block diagram of a Multipump Penta drive operating in Master mode.

2.1. Fixed and Variable-speed Operation

2.1.1. Slave Fixed-speed Pumps

When **C605** = P2-P5 Fixed Speed, the master pump is always working to ensure the fine tuning of the plant, whereas the slave pumps are started/stopped depending on the following criteria:

1) Percentage of the working power required for the master pump (allowing optimum performance of the plant).
2) Maximum allowable adjusting error.
3) Maximum difference among the working time of each available pump.

When setting a minimum allowable operating frequency for the variable-speed pump (**P600** > 0%), the Manager Penta drive will configure the operating pumps based on the working conditions required for the variable-speed pump (step 1 above).

If an adjusting error occurs, which is exceeding the maximum allowable error (**P605**) for a given time (**P606**), a configuration changeover for the "ON" pumps and the "OFF" pumps can be implemented (step 2 above).

If the function of the maximum difference among the working time of each available pump is activated (**P621** > 0) and the difference in working time is greater than the preset value between a working pump and an available inactive pump, the working time are automatically exchanged.

If the function above is disabled (**P621** = 0), when changing from On to Off pumps, the best combination is chosen, so as to obtain an even working period of the connected pumps.

If the master pump is not available for whatever reason (maintenance, etc.), the plant can be kept operating by setting a step control through the fixed-speed pumps only (**C606** = 0: No). In that case, the maximum allowable adjusting error depends on parameters **P610** and **P611**.

NOTE

<u>The power ratio of the connected pumps must meet one of the following requirements</u>:

- All pumps must have the same power ratings.
- The connected pumps can have different power ratings, provided that 1) each pump with the greatest power rating is matched with lower-rated pumps that, if combined, have power ratings equal to/higher than the former pump; 2) the power rating of the master pump must be higher than/equal to the power rating of the lower-rated pump.

NOTE

If **C606** = [0: No], the system is NOT disabled when the master pump or the master drive is out of order. The only conditions that stop the system are the following:

1) When a digital input of the master drive configured as an external alarm is detected as open.
2) When an analogue input is set as 4-20mA and the Penta drive detects a signal either lower than 4mA (failure in the sensor or the sensor wiring) or higher than 20mA.
3) When a WATCHDOG for fieldbus or serial link trips (if configured with **R016** and **R005** respectively).

2.1.2. SLAVE VARIABLE-SPEED PUMPS

When **C605** = P2-P5 Variab. Speed, the slave pumps and the master pump are started/stopped based on the following criteria:

1) Percentage of the working power required for the master pump (allowing optimum performance of the plant).
2) Maximum allowable adjusting error.
3) Maximum difference among the working time of each available pump.

By setting a given frequency range for the variable-speed pumps ([**P600** ÷ **P601**] ; [f_{min}% ÷ f_{max}%]), this condition is searched when the system is operating. For example, if **P600** = 60% and 4 pumps are working at 50% of their operating frequency for a time longer than the time set in **P602**, the manager Penta drive will stop one of the four pumps and will force the remaining pumps to work at higher frequency, so that the operating frequency of the working pumps is included in the preset frequency range [**P600** ÷ **P601**].

If an adjusting error occurs, which is exceeding the maximum allowable error (**P605**) for a given time (**P606**), a configuration changeover for the "ON" pumps and the "OFF" pumps can be implemented (step 2 above).

If the function of the maximum difference among the working time of each available pump is activated (**P621** > 0) and the difference in working time is greater than the preset value between a working pump and an available inactive pump, the working time are automatically exchanged.

If the function above is disabled (**P621** = 0), when changing from On to Off pumps, the best combination is chosen, so as to obtain an even working period of the connected pumps.

If the master pump is not available for whatever reason (maintenance, etc.), the plant can be kept operating by setting **C606** = 0: No.

NOTE <u>All the connected pumps must have the same power ratings</u>.

NOTE If **C606** = [0: No], the system is NOT disabled when the master pump or the master drive is out of order. The only conditions that stop the system are the following:

1) When a digital input of the master drive configured as an external alarm is detected as open.
2) When an analogue input is set as 4-20mA and the Penta drive detects a signal either lower than 4mA (failure in the sensor or the sensor wiring) or higher than 20mA.
3) When a WATCHDOG for fieldbus or serial link trips (if configured with **R016** and **R005** respectively).

3. WIRING DIAGRAMS

3.1. Power Wiring Diagram when using Slave Fixed-speed Pumps

NOTE When slave fixed-speed pumps are used, set parameter **C605 = 1: P2-P5 Fixed Speed**.

The power wiring of the Manager drive controlling a Multipump plant is shown in the diagram below.

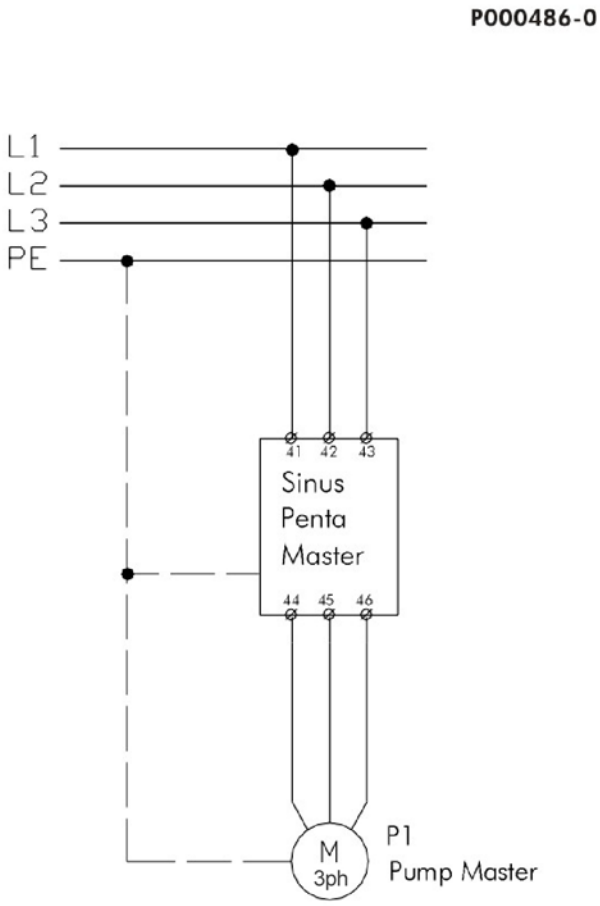

Figure 3: Wiring diagram for the Manager drive.

In the figure below, the power wiring of the slave fixed-speed pumps depend on the default settings of the digital inputs and outputs of the Manager drive controlling the Multipump plant.

The slave pumps may also be manually controlled via the Auto/Man selector switch (the drive is then by-passed).

The Penta drive also allows overriding the automatic control of the slave pumps and forcing their startup (or stop) without using the Auto/Man. selector switches (see the By-Pass Manager Menu).

Auxiliary relays are required to control slave pumps P4 and P5.

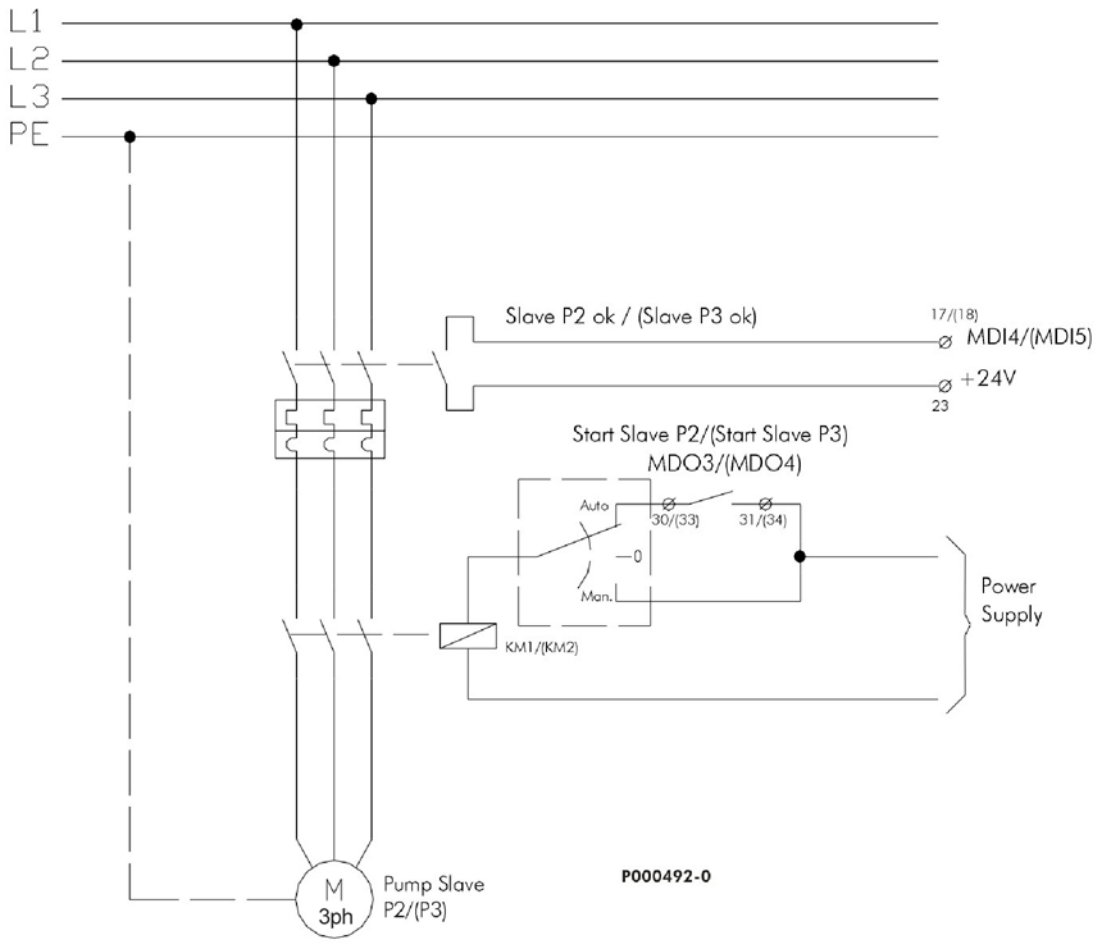

Figure 4: Power wiring for slave pumps P2 and P3.

The enabling signals of Slave P2 OK and Slave P3 OK must be sent to inputs MDI4 and MDI5 respectively of the Manager drive. The Start Slave P2 and Start Slave P3 commands are sent from relay digital outputs MDO3 and MDO4.

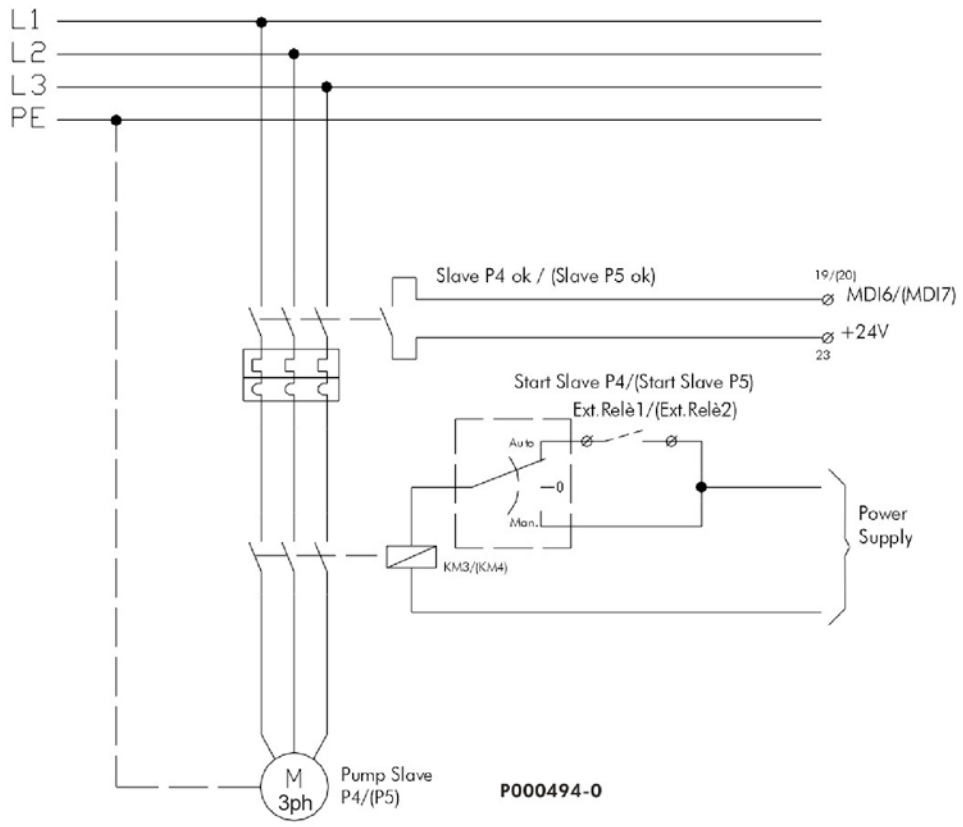

Figure 5: Power wiring for slave pumps P4 and P5.

The enabling signals of Slave P4 OK and Slave P5 OK must be sent to inputs MDI6 and MDI7 respectively of the Manager drive.

Digital outputs MDO1 and MDO2 allow controlling two auxiliary relays (Imax = 50mA) sending the Start Slave 4 and Start Slave 5 commands.

The auxiliary relays controlled via MDO1 and MDO2 can be powered through 24V power supply of the control board or through an external power source (Vmax. =48V). When using digital outputs MDO1 and MDO2 to control an inductive load (coil of the auxiliary relay), a freewheeling diode is always recommended.

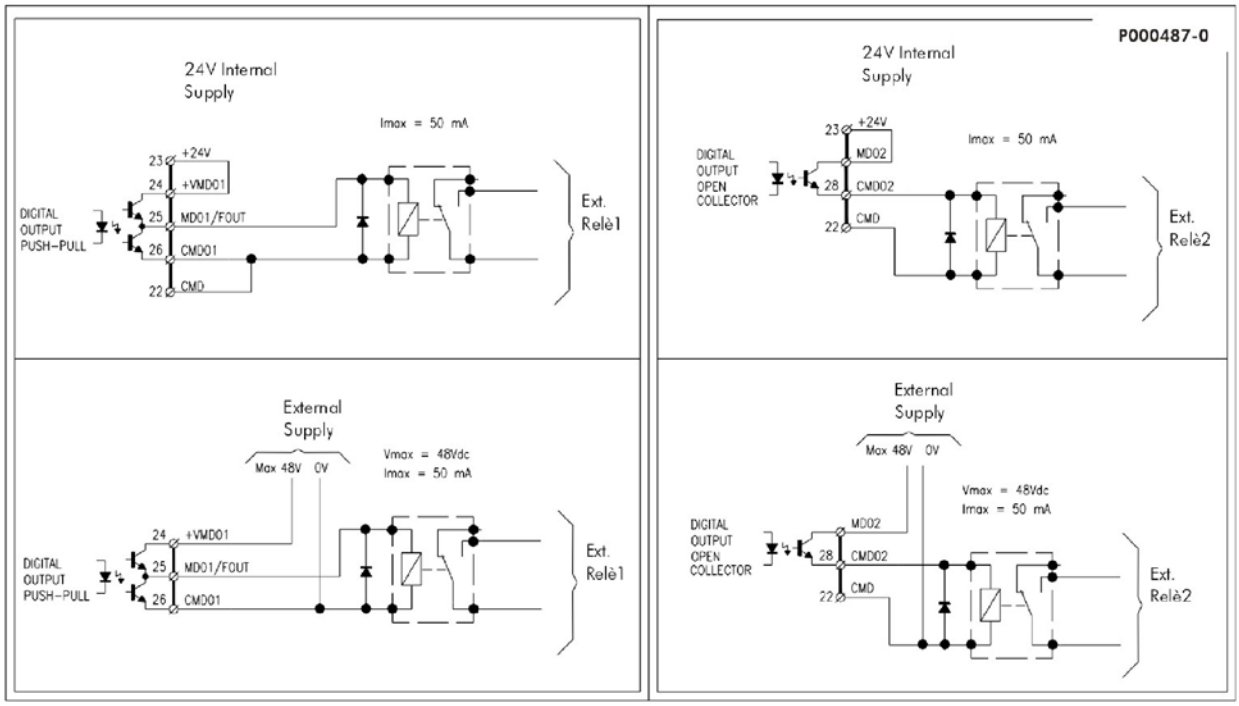

Figure 6: Wiring diagram for digital outputs MDO1 and MDO2 used to control the two auxiliary relays (Start Slave P4 and Start Slave P5 commands).

3.2. Signal Wiring Diagram when using Slave Fixed-speed Pumps

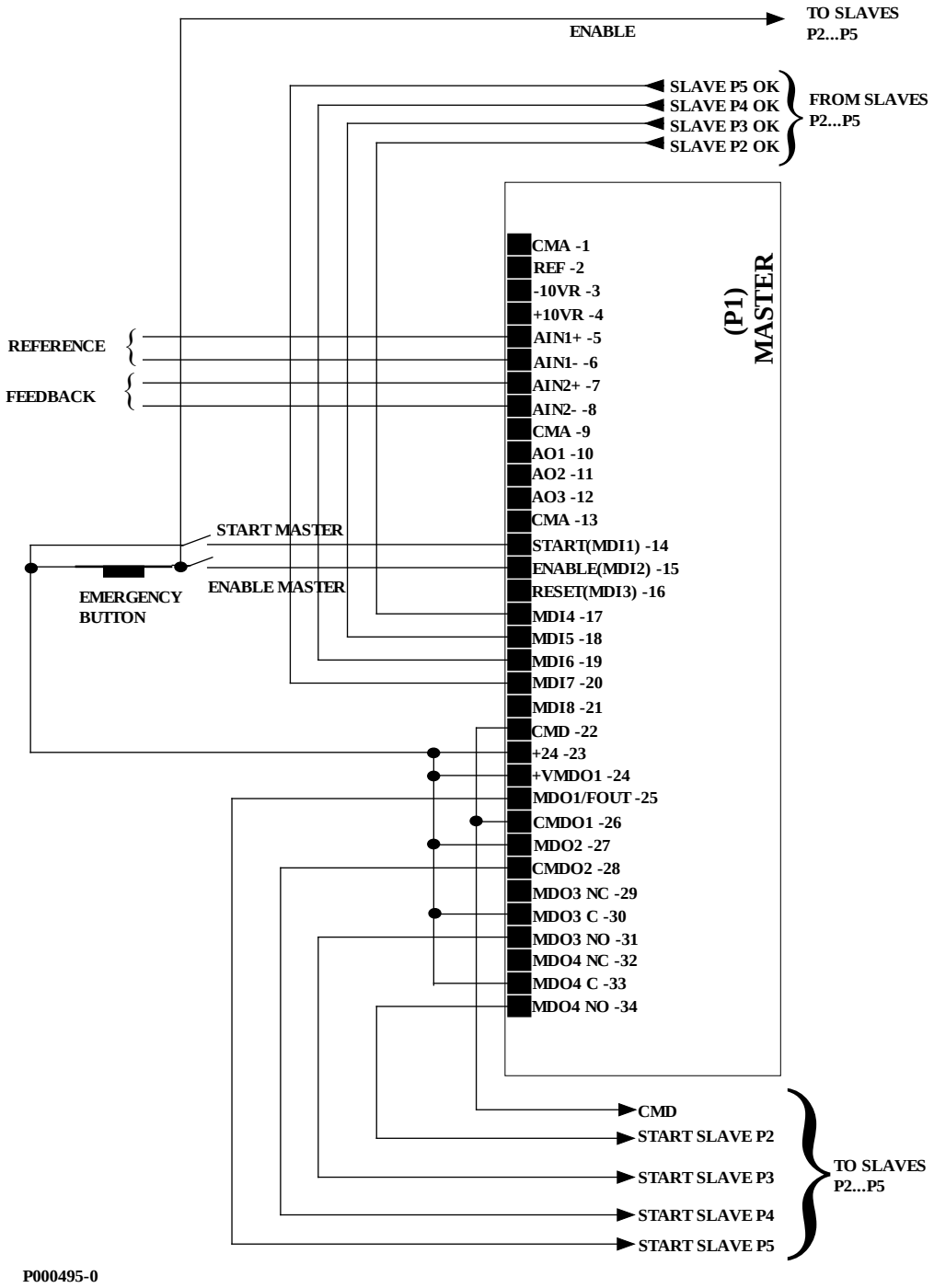

Figure 7: Wiring diagram of the signals sent to the Master drive when slave fixed-speed pumps are used and when digital outputs MDO1 and MDO2 are powered through internal 24V power supply.

NOTE

The Start Slave P4 and Start Slave P5 commands cannot be used to directly energize a contactor (Vmax. = 48V, Imax. = 50mA); an auxiliary relay must then be used (see section above).

3.3. Power Wiring Diagram when using Slave Variable-speed Pumps

NOTE When variable fixed-speed pumps are used, set parameter **C605 = 0: P2-P5 Variab. Speed.**

The power wiring of the Manager drive controlling a Multipump plant is shown in the diagram below.

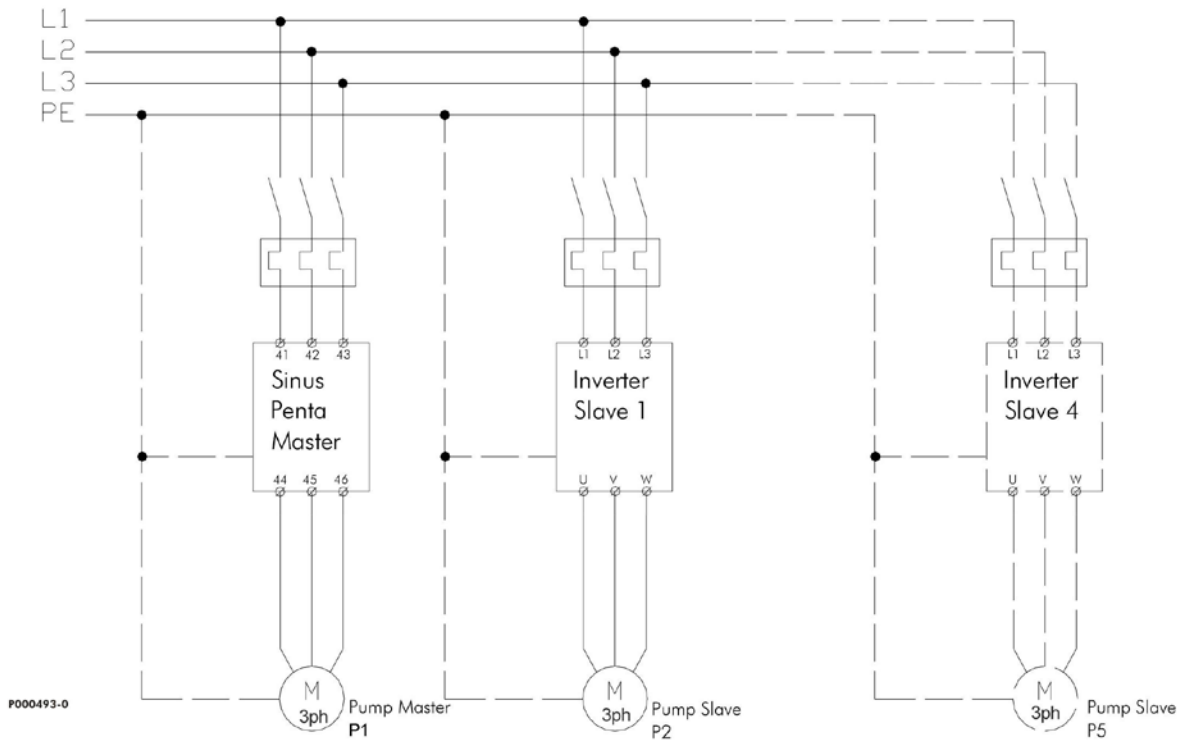

Figure 8: Power wiring of the drives controlling a Multipump plant.

3.4. Signal Wiring Diagram when using Slave Variable-speed Pumps

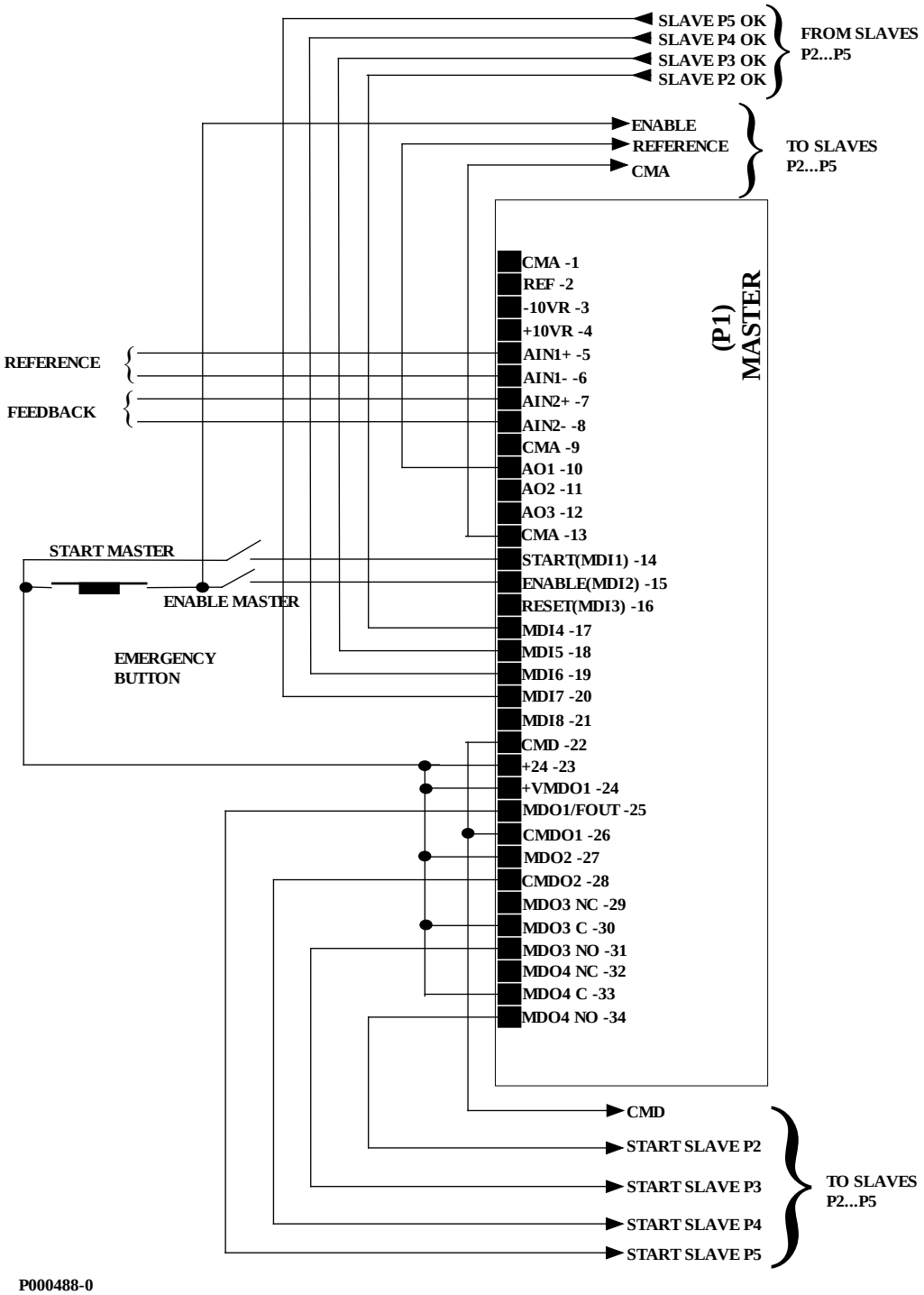

Figure 9: Signal wiring for the Master drive handling slave pumps operating at variable speed.

As shown in the diagrams above, the pumps can be manually operated as follows:

- The Master pump can be manually operated by closing input MDI8 (or any other available digital input) after programming **C622** = MDI8;

- The slave pumps can be manually operated by by-passing the master drive via the Auto/Man selector switch and by setting a speed reference from the digital input set as Multireference (C155 = MDI4, as by default).

The Penta drive also allows overriding the automatic control of the slave pumps and allows forcing their startup (or stop) without using the Auto/Man. selector switches (see the By-Pass Manager Menu).

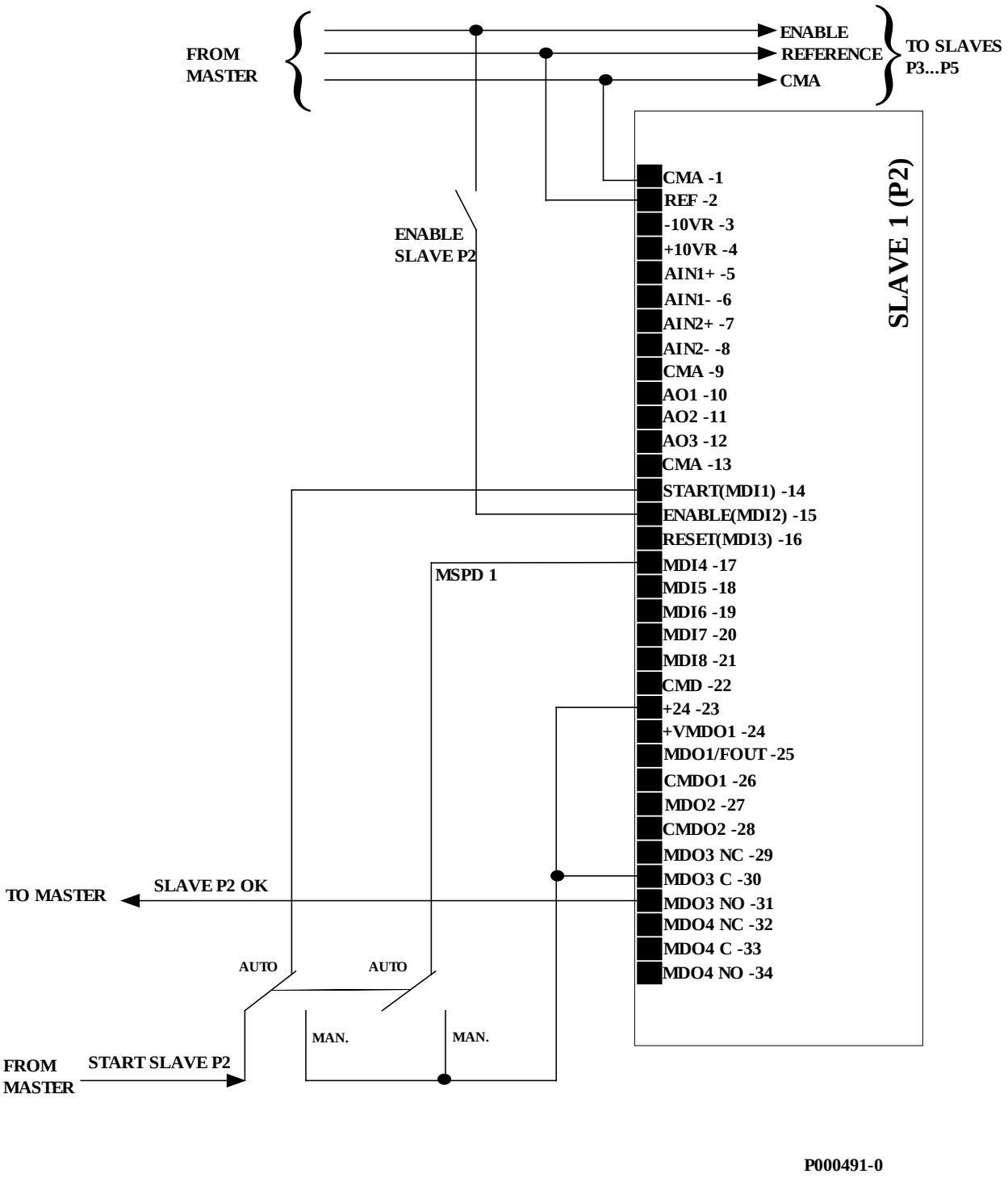

Figure 10: Signal wiring for the slave drive with Auto./Man. selector switch allowing selecting the type of automatic or manual control and forcing a speed reference through MDI4 set as Multireference.

3.5. Wiring Diagram when using the Master Serial Port

NOTE To activate the control via serial port, set digital inputs for Pump OK C615÷C618 to 9=[Serial Link].

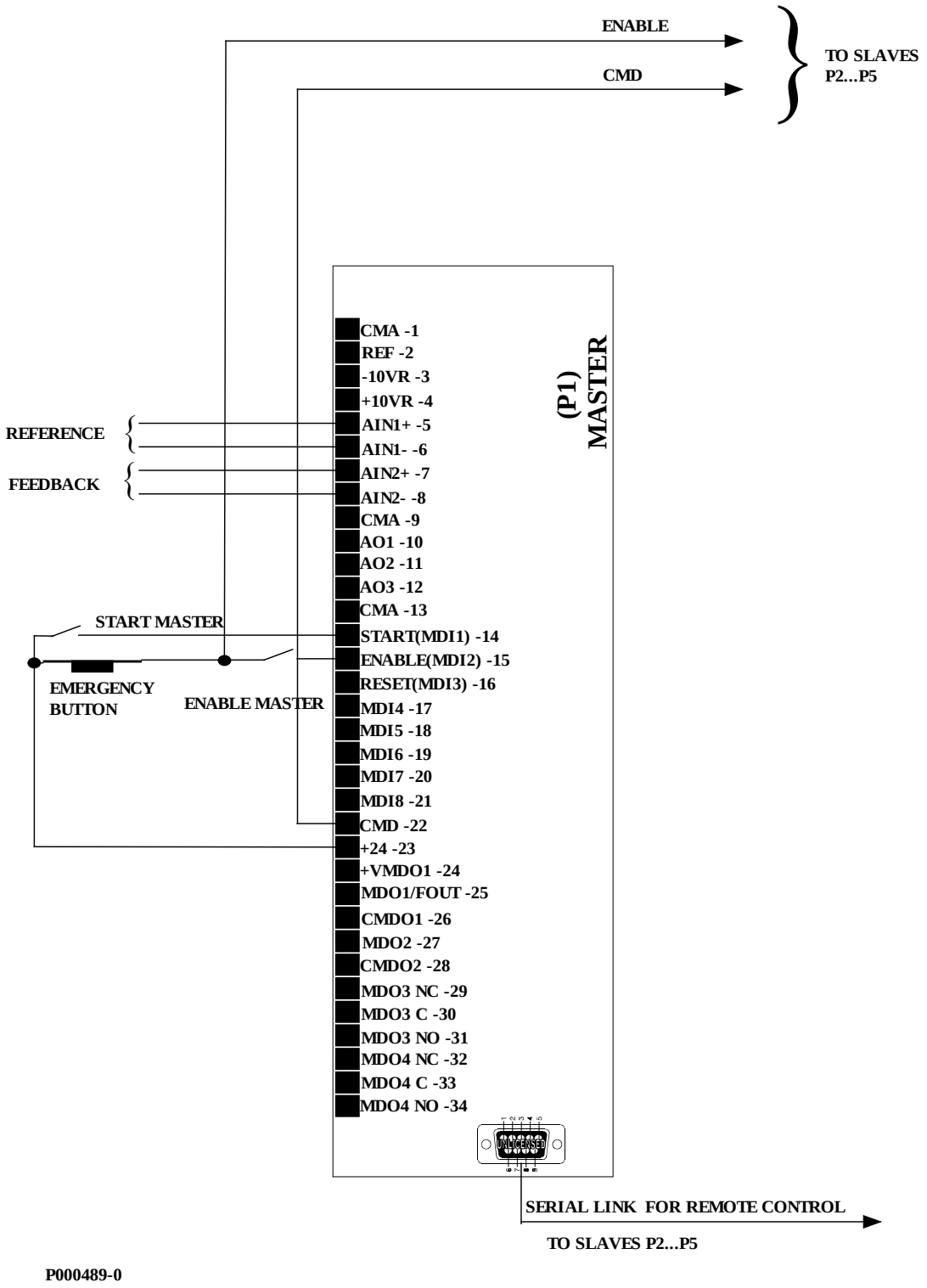

Figure 11: Wiring diagram of the Master drive when the slave pumps are controlled via serial link.

3.6. Multimaster Wiring Diagram (2 MUP Drives)

NOTE

To configure the Multimaster mode, the following parameters are to be programmed on the two Multipump drives being used:

- **C615 = 9: Serial Link** (Digital input for pump 2 available – the connection between the two MUP drives must be a serial link)
- **C650 = 6: Sinus Penta MUP** (Type of drive pump 2)
- One digital output is to be programmed as **D13: Master MUP** (MDO1 in the diagram to be programmed via **P630**)
- **C623** (Slave Mode digital input) programmed as a digital input (MDI4 in the diagram).

The outputs programmed as Master MUP for both the multipump drives are to be connected to digital inputs set to **C623** of the other drive, as shown in the diagram below.

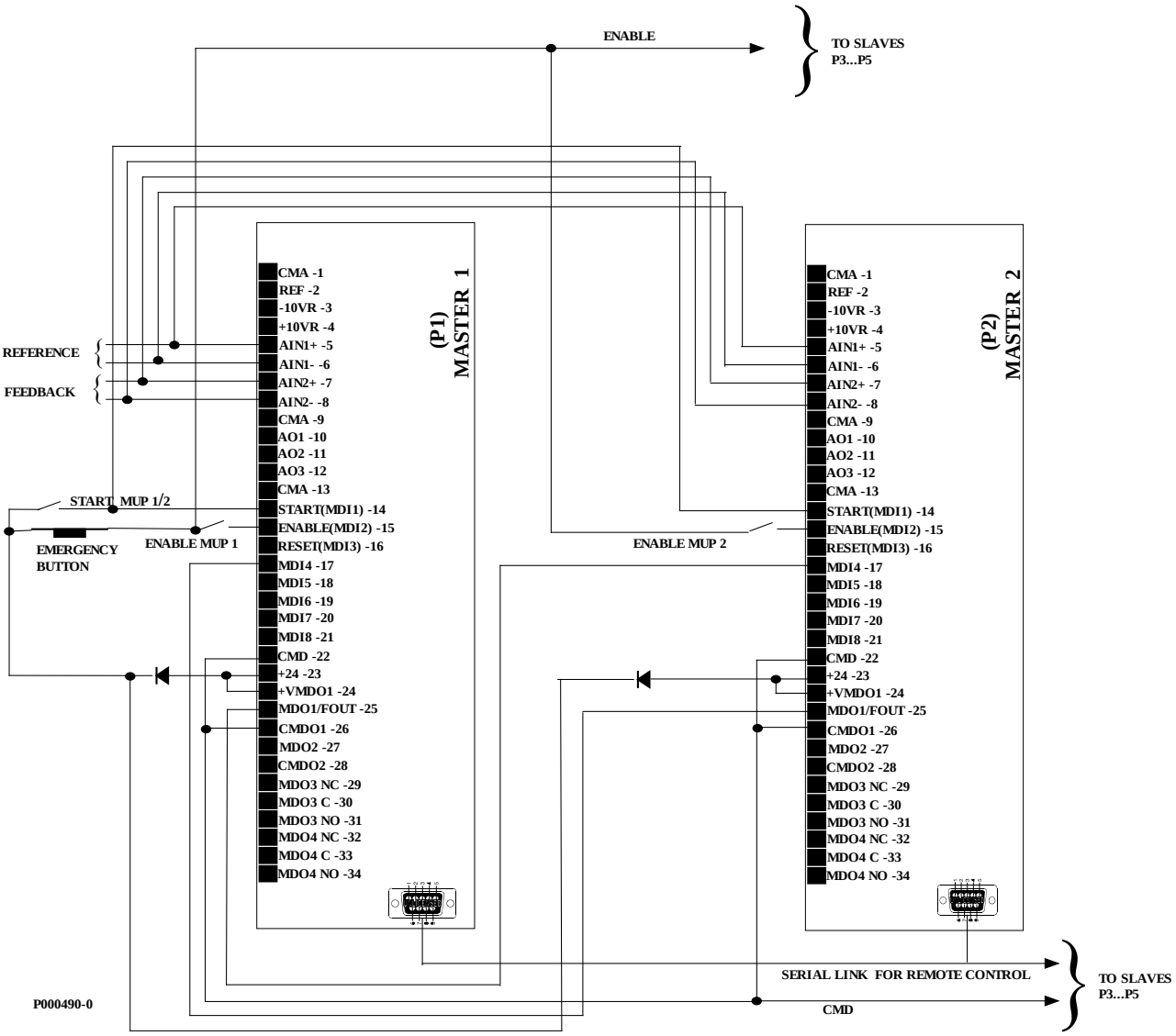

Figure 12: Wiring diagram for Multipump drives in Multimaster configuration.

NOTE

- When the pump drives are connected via serial link, up to 5 pumps can be controlled.
- If the drives of the slave pumps are controlled through the digital inputs (without using ES847 expansion board), only 2 additional pumps can be controlled, because one digital output of the two MUP drives is used for allocating the speed reference of the slaves to the analogue output of the MUP drive which is operating as the Master drive (digital output programmed as Master MUP drive). See Figure 13, where **P636 = D13 Master MUP** and MDO4 for each inverter is used for reference deviation to the other slaves.
- Reference and feedback can be configured on either REF, AIN1, AIN2. Wiring above in Figure 12 shows typical wiring with the reference via AIN1 and feedback via AIN2.

CAUTION

The Multimaster configuration allows the runtime commutation of the plant supervisor from MUP1 to MUP2 (see parameter **C606**).
To avoid uneven adjustment of the plant, the same settings are required for both master drives, except for the Master Serial Link Menu.

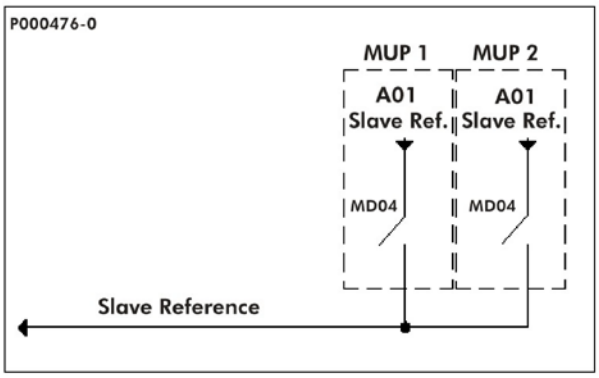

Figure 13: Connection of the reference from Multimaster to Slave controlled via digital outputs and analog reference

3.7. Slave Modbus/RS485 Wiring Connection

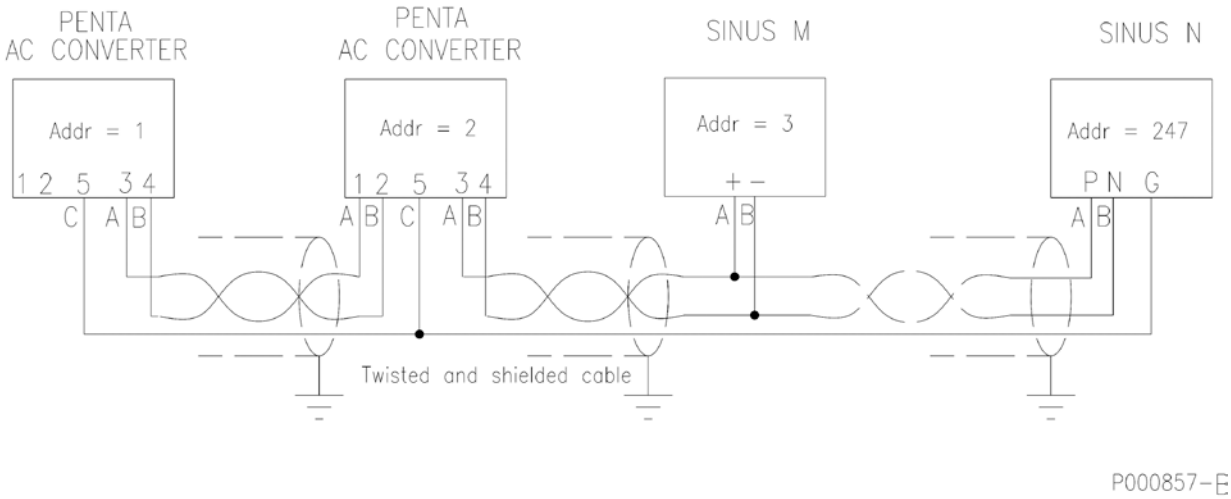

Figure 14: Typical Modbus wiring connections for Multimaster Penta and Sinus M and N slave devices.

4. FIRMWARE DOWNLOAD FOR APPLICATION PROGRAMMING

The Remote Drive software and the PXxxxxF0.mot, PXxxxxF1.mot files are required to download any applications to a Sinus Penta drive. The download procedure is detailed in the following section.
As per the Multipump application, the PMxxxxF0.mot and PMxxxxF1.mot files are required, which are contained in the CD-ROM supplied by Elettronica Santerno.
For different applications, please refer to the relevant manuals and to the updates available on Elettronica Santerno's website.

NOTE Please refer to the User Manual of the Remote Drive software for more details.

The firmware of the Sinus Penta drives consists of two files, one containing the code and one containing the MMI table for the keypad interface. Both files are hexadecimal files with the MOT format. The filenames ending with "F0" relate to the code; the filenames ending with "F1" relate to the MMI table.

CAUTION The first three digits in the PMxxxxF0.mot and PMxxxxF1.mot filenames must always match (for example PM166xF0.mot and PM166xF1.mot).

4.1. Firmware Upgrade for SINUS PENTA Drives

This section covers how to download the Multipump application (**PM**) to a standard Sinus Penta (**PD**) or how to upgrade the firmware of a drive already programmed as Multipump.

NOTE In case of multidrop connection (RS485), only the equipment to be upgraded shall be connected to the network.

1	Launch the Remote Drive software.
2	Select the dialog language (click a flag) and press Next.
3	In the "Connection Parameters" window, select the Local mode. In the "Serial Configuration Parameters" window, set the interface device, the COM being used and the baud rate (38400bps); click "Connect", then click the "Next" button. In the example below, a USB-RS485 converter is used. 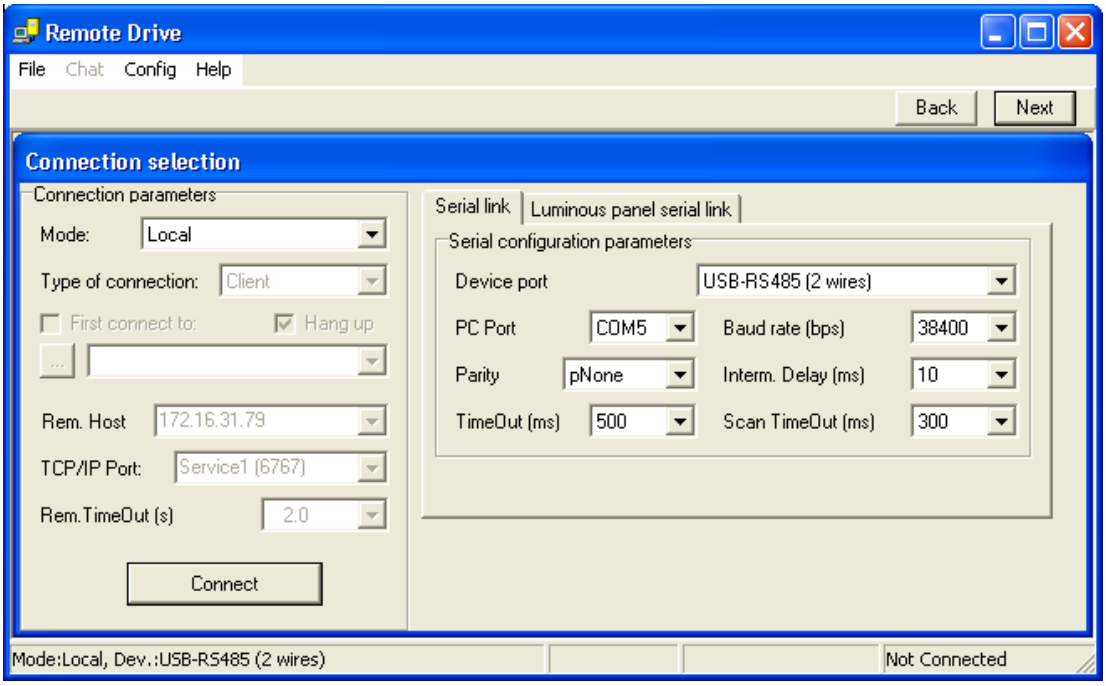
4	Select "Firmware Upgrade" from the "File" drop-down menu. Enter the path for the PMxxxxF0.mot and PMxxxxF1 files to be downloaded. If either the code file or the MMI table is to be updated, go to step 7. If an application shall be downloaded to a standard Sinus Penta PDxxxx, select the PMxxxxF0.mot file and click the "Open" button.

5	Send the "Autodet." command to allow the Remote Drive to detect the type of connected equipment. Once the product is detected, PDxxxx will appear in the Equipment Type window. Press the "Send" button; confirmation for the Flash clearing will appear. Click "Yes" to start downloading. Once download is over, go to step 6. 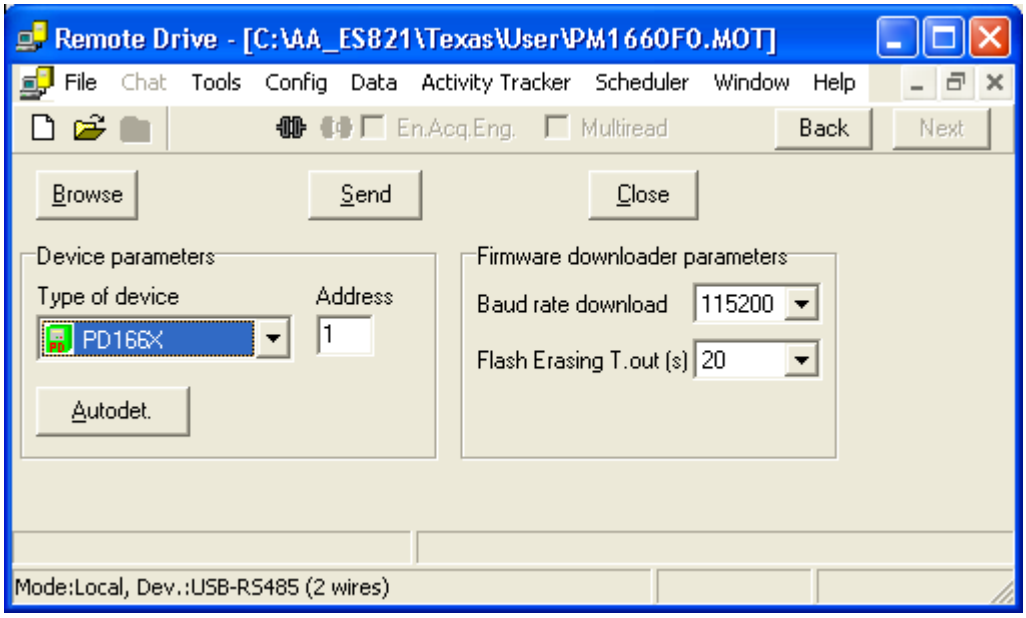
6	Click "Browse" to select the PMxxxxF1.mot file, then click "SendTab". Once this file is downloaded, the application download is complete (end of the download procedure).
7	Click "Browse" to select the file to be updated, PMxxxxF0.mot for the code file and PMxxxxF1.mot for the MMI table; first click "Open", then click "Send" or "SendTab". Confirm flash clearing. The Upgrade procedure is over.

5. MENU TREE

NOTE The Menu Tree below includes the Multipump application menus only. For the whole list of the available menus, please refer to the Sinus Penta's **Programming Instructions** manual.

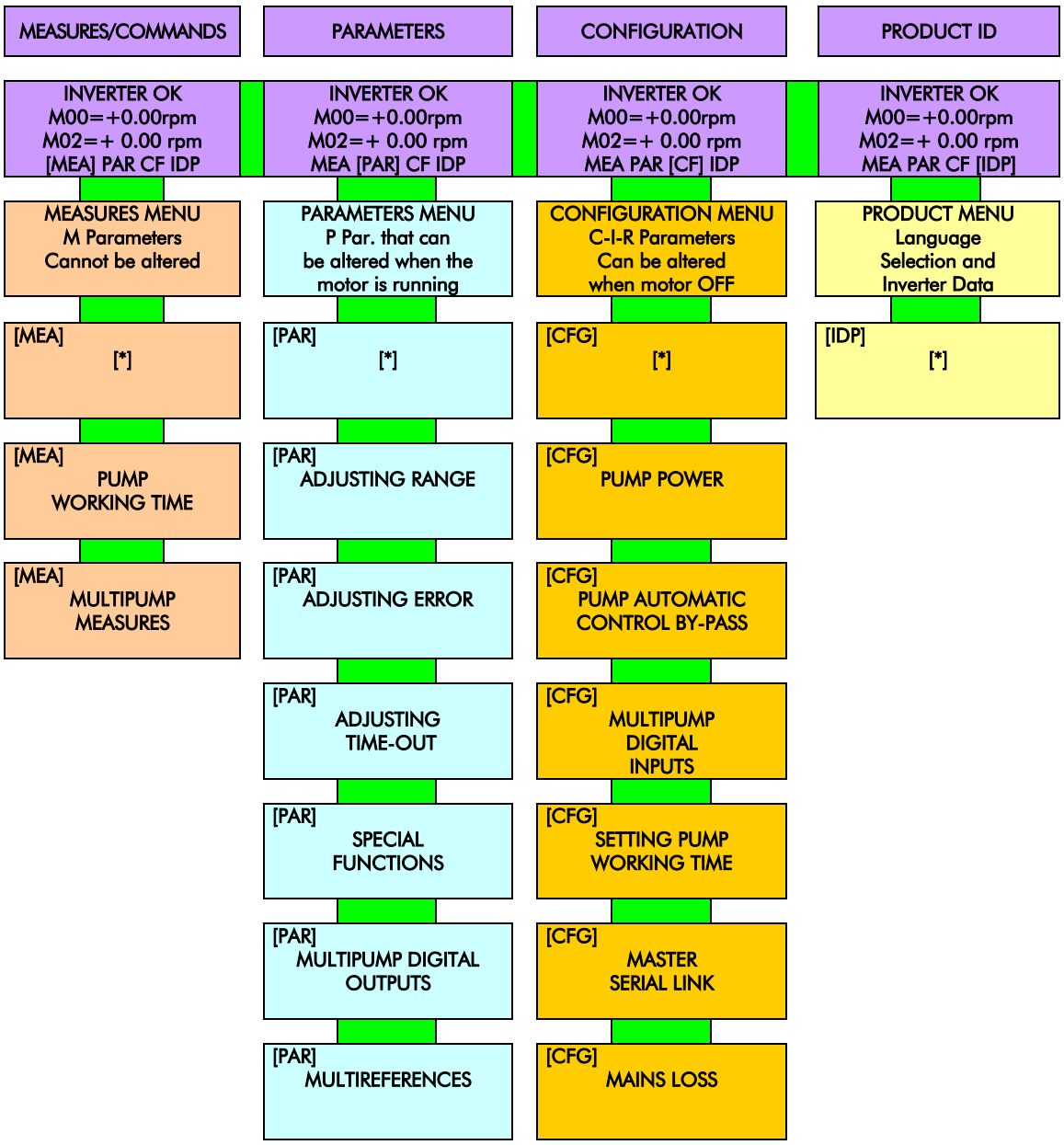

Figure 15: Menu Tree.

NOTE [*] See menu list in the Sinus Penta's **Programming Instructions** manual.

6. START UP MENU

6.1. Overview

The Start-Up Menu is a wizard allowing programming the main parameters for the connected motor and the parameters for PID control.

The parameters in this menu are the same as described in the COMMISSIONING MULTIPUMP section.

The Start-Up Menu is displayed when the Penta drive is first started. The Start-Up Menu can be reactivated at any time. To do so, set **P265** in "Start Up" mode (see Sinus Penta's **Programming Instructions** manual) and power on the Penta drive again.
The following is the root page of the Start-Up menu:

```
[IDP]SINUS PENTA
 START-UP MENU
  Press ENTER
  to start
```

Press **Enter** to enter the wizard. Before entering the control parameters, you are asked to choose a dialogue language:

```
P263 Language


→@@@@@@@@@@@@@@@@
```

then you are asked to choose the display mode of the Start Up Menu:

```
When does the
Start-Up Menu
activate?
→@@@@@@@@@@@@@@@@
```

You can choose one of the following:

```
1:EVERY START UP
2:ONLY NOW
3:NEXT START UP
4:NEVER
```

If you select "EVERY START–UP", the wizard appears whenever the Penta drive is powered on;
if you select "ONLY NOW", you can scroll through the menu and the wizard is disabled as soon as you quit the menu;
if you select "NEXT START–UP", the menu is displayed only when the Penta drive is next started up;
if you select "NEVER", the Start-Up menu is disabled.

Parameters included in the Start-Up menu:

Parameter	Description	Visibility
C008	Rated mains voltage	
C013	Type of V/f pattern	
C015	Rated motor frequency	
C016	Rated motor rpm	
C017	Rated motor power	
C018	Rated motor current	
C019	Rated motor voltage	
C028	Min. motor speed	
C029	Max. motor speed	
C034	Voltage preboost	
P009	Acceleration ramp time	
P010	Deceleration ramp time	
C043	Current limit while accelerating	
C044	Current limit at constant rpm	
C045	Current limit while decelerating	
C265	Motor thermal protection	
C267	Motor thermal time constant	If **C265** is enabled
C291	PID operating mode	
C291a	PID control mode	
C285	Selection of reference n.1 for PID	
C288	Selection of feedback n.1 for PID	
P267	Preset PID units of measure	
P257	PID measure scale factor	
P236	Max. value of PID output	
P237	Min. value of PID output	
P237a	Enable PID wake-up	
P237b	PID wake-up level	If **P237a** is enabled
P255	START disable delay if PID Out=**P237**	
C600	N. of pumps in the plant	
C601	Power rating for pump 2	
C602	Power rating for pump 3	
C603	Power rating for pump 4	
C604	Power rating for pump 5	
C605	Type of slave pumps	
C615	Digital input for pump 2	
C616	Digital input for pump 3	
C617	Digital input for pump 4	
C618	Digital input for pump 5	
C623	Slave mode digital input	

P600	Minimum operating frequency	
P601	Maximum operating frequency	
P602	Configuration changeover delay due to out of range values	
P605	Max. adjusting error	If C605= 0: P2-P5 Variable Speed
P606	Delay for configuration changeover	
P610	Max. adjusting error	If C605= 1: P2-P5 Fixed Speed
P611	Delay for configuration changeover	

NOTE Parameters highlighted in grey are critical for the Multipump operation and are required to be user set prior to operating the system.

After setting the last parameter and moving the cursor forward, the following page will appear:

```
Press UP arrow
to quit
Press DOWN arrow
to continue
```

Press ▲ to quit the Start-up menu. The default page of the system will be displayed.

7. COMMISSIONING

1	<u>Installation</u> Follow the instructions given in the "Caution Statements" and "Installing the Equipment" sections in the standard Sinus Penta's Installation Instructions manual. Also refer to the wiring diagram given in this manual (see the WIRING DIAGRAM section) depending on the type of plant to be obtained.
2	<u>Power Supply</u> Power on the drive and avoid closing the link to the ENABLE input (terminal 15) so that the drive is kept disabled.
3	<u>Parameter Alterations</u> Please refer to the START UP MENU for the configuration of the programming parameters.
4	<u>Supply Voltage</u> Set the real supply voltage for the drive. You can set two mains voltage ranges or the DC supply stabilized by a Regenerative Penta drive. To set the type of power supply for the drive set configuration parameter **C008** to the value corresponding to the installation concerned.
5	<u>Motor Parameters</u> Set the motor ratings as follows: - **C015** (fmot) rated frequency - **C016** (nmot) rated rpm - **C017** (Pmot) rated power - **C018** (Imot) rated current - **C019** (Vmot) rated voltage - **C028÷C029** (nmin÷nmax) min. and max. allowable speed values. If a square V/f pattern is required, set **C013** = 1: Square. Parameter **C034** allows adjusting the voltage preboost.
6	<u>Overload</u> If you need to adjust the max. allowable current, set the following parameters: - **C043** (Iacclim) current limit while accelerating - **C044** (Irunlim) current limit at constant rpm - **C045** (Ideclim) current limit while decelerating
7	<u>Pump Parameters</u> Set the following parameters: - **C600** Pump N. → number of pumps installed in the plant (1÷5) - **C601÷C604** Power of pumps 2÷5 - **C605** Plant Operating Mode → [0: P2-P5 at fixed speed; 1: P2-P5 at variable speed]. - **C615÷C619** Available pump inputs. Set **9 - Serial link** to set the serial connection of the slave pump and to activate parameters **C650÷C695** from the Master Serial Link Menu. **When in serial configuration, also set:** - **C650/C662/C674/C686** Pump 2/3/4/5 Type of Drive → Refer to the options detailed in the Master Serial Link Menu. **If using the MUP Multimaster configuration, also set the following for both multipump drives:** - **C650** Pump 2 Type of Drive → [6:Sinus Penta MUP] - One digital output is to be set as **D13: Master** by using one of the parameters among **P630**, **P632**, **P634**, **P636**. - **C623** (Slave Mode digital input) set as a digital input (**MDI1÷MDI8**). - Check if the outputs programmed as Master MUP for both the Multipump drives are connected to the digital inputs set to **C623** of the other drive. - Remember that the two MUP drives must be connected via serial link. - **C662/C674/C686** Pump 3/4/5 Type of Drive→ Refer to the options detailed in the Master Serial Link Menu. - **C606** Plant Disable with Master KO →[2: No – Slave MUP Enabled]

	- **P630** MDO1: Signal Selection → [13:Master MUP] - **C623** Slave Mode Digital Input On the secondary MUP master, parameter **C651** is to be set as follows: - **C651** Pump 2 device address = Serial address of pump 1 (e.g. 1).
8	<u>Slave Pump Controls</u> The drives controlling the slave pumps can be connected to the Master drive via serial link (the start/stop commands and the reference are sent via serial link). Otherwise, you can use the digital outputs of the Master drive to start the slave pumps, the analogue output to detect the reference, and the digital inputs to detect which slave pump is currently available. This manual includes the wiring diagrams for the slave drives linked to the master MUP if a serial link is used or if the control signals are obtained through the outputs/inputs in the Master drive. The default settings of the Master MUP drive are given in the wiring diagrams. The availability and run commands for the slave pumps are given in the Multipump Measures menu, (parameters **M600** and **M601**). If the slave pumps are controlled via serial link, the communication status is given in **M604**. <u>Slave drives controlled through digital inputs/outputs</u> Make sure that wiring matches the settings for the digital inputs/outputs of the MUP drive (MUP Digital Inputs Menu and MUP Digital Outputs Menu). <u>Slave drives controlled via serial link</u> Access the Master Serial Link Menu; if the slave drives are manufactured by Elettronica Santerno, select the type of drive: the values required for communications will be automatically preset (store them with the SAVE key). If the drives being used are not manufactured by Elettronica Santerno, set the parameters relating to the Type of Drive as [0:Generic] and set the parameters required for serial communications. ⚠ **CAUTION** Set the correct device address for the slave drives, as well as the correct baud rate, stop bits and parity. **In the slave drives, activate a serial communication watchdog, where possible.** If required, access the Serial Links menu (see the Sinus Penta's **Programming Instructions** manual) and set: • Ensure slave drive serial address parameters are <u>unique</u> (requires drive to be reset to take effect after modifying) • Ensure baud rate (**R003**), parity and stop bits (**R006**) are the <u>same</u> for all drives • Ensure all slave drives "Command Source Selection" = Serial Link/RS485 (Parameter **C140** = Sinus Penta, Parameter **C21** = Sinus K, Parameter "Drv" = Sinus M/N) • Ensure all slave drives have "Reference" = Serial Link/RS485 (Parameter **C143** = Sinus Penta, Parameter **C22** = Sinus K, Parameter "Frq" = Sinus M/N) For slave devices operating on a serial link network also configure **C655/C667/C679/C691** Pump 2/3/4/5 Value for max reference → refer to section Master Serial Link Menu for selection.

9	<u>Adjusting</u> Based on the type and the requirements of the pumping plant, the slave pumps will be activated/deactivated according to their working time, thus allowing their even operation. - PID–specific parameters - **P605÷P606** or **P610÷P611** Maximum allowable adjusting error - **P600÷P602** Desired operating frequency range
10	<u>Additional settings</u> The Special Functions Menu allows performing additional settings: - **P620** Time between a configuration changeover and the next - **P621** Maximum difference among pump working time If some pumps have already been operating and if their working time is known, access the Pump Working Time Settings and set the working time (**I021**) and the relevant pump (**I022**), so as to obtain an even working period of the connected pumps. NOTE The working time of the connected pumps is displayed in the Pump Working menu. They are automatically refreshed by the MUP drive.
11	<u>Starting the system</u> The system can be started as follows: - through the automatic control of the slave pumps; the PID reference is required and the feedback from the controlled system must be checked; - through the manual control of the slave pumps; the Master is by-passed using the Auto/Man selector switch (see Figure 9 and Figure 10); - through a forced start-up (or stop) of the pumps; the Master must then be programmed accordingly (see the By-Pass Manager Menu).

8. PARAMETERS FOR SINUS PENTA DRIVES WITH MULTIPUMP APPLICATION SOFTWARE

When the Master drive is programmed with the Multipump application software, the available parameters include special-purpose parameters as well as some of the parameters relating to a standard Sinus Penta drive. The parameters or measures relating to the PM drive (Penta - Multipump) are marked with a C, P, or M as for any standard Sinus Penta drive and are followed by a figure equal to or higher than 600.

8.1. Measures Menu

8.1.1. Overview

The section below covers the measures used for the Multipump application.

8.1.2. Multipump Measures

M600 Available Pumps

M600	Range	0 ÷ 31 decimal 00000b ÷ 11111 binary 00h ÷ 1F h hexadecimal	Bit-controlled measure 0: Not available 1: Available Bit 0 → Pump 1 Bit 1 → Pump 2 Bit 2 → Pump 3 Bit 3 → Pump 4 Bit 4 → Pump 5
	Active	Always active.	
	Address	1551	
	Function	This Measure displays the pump status detected through a digital input or via serial link, depending on the settings in C615 – C618.	

M601 Working Pumps

M601	Range	0 ÷ 31 decimal 00000b ÷ 11111 binary 00h ÷ 1F h hexadecimal	Bit-controlled measure 0: Not operating 1: Operating Bit 0 → Pump 1 Bit 1 → Pump 2 Bit 2 → Pump 3 Bit 3 → Pump 4 Bit 4 → Pump 5
	Active	Always active.	
	Address	1552	
	Function	This Measure displays the operating conditions of the plant pumps.	

NOTE If the Multimaster mode is active, the MUP pump operating as the Master will always consider the slave MUP as Pump 2.

M602 Slave Pump Setpoint

M602	Range	0 – 10000	0 – 100.00%
	Active	Always active.	
	Address	1553	
	Function	This is the reference for the slave pumps (provided that they are controlled by the drive at variable speed).	

M603 Master Pump Setpoint

M603	Range	0 – 10000	0 – 100.00%
	Active	Always active.	
	Address	1554	
	Function	This is the reference for the pump controlled by the MUP drive.	

M604 Status of the Serial Communications to the Slave Pumps

M604	Range	0 ÷ 15 decimal 0000b ÷ 1111 binary 00h ÷ 0F h hexadecimal	Bit-controlled measure 0: Communications KO 1: Communications OK Flashing: exception code from the slave pump Bit 0 → Pump 2 Bit 1 → Pump 3 Bit 2 → Pump 4 Bit 3 → Pump 5
	Active	Always active.	
	Address	1555	
	Function	This Measure displays the status of the serial communications to the pumps programmed as Serial Link in **C615** – **C618**. If the bit flashes between 0 and 1 and the serial link timeout warning **W47** appears, this means that the slave pump has sent a Modbus exception code. The exception codes are the following: 0x01 [ILLEGAL FUNCTION] 0x02 [ILLEGAL DATA ADDRESS] 0x03 [ILLEGAL DATA VALUE] 0x06 [SLAVE DEVICE BUSY].	

M605 Operating Condition of the MUP Drive

M605	Range	0 – 1	0: Master MUP – 1: Slave MUP
	Active	Always active.	
	Address	1556	
	Function	The operating condition of the MUP drive is displayed in this Measure. When operating via the Slave drive, the MUP drive overrides the plant manager control and is sent the speed reference and the run command from the Manager MUP drive via the serial link. If the digital input set as Slave MUP drive deactivates, the drive becomes the Master MUP and takes control of the system.	

8.1.3. PUMP WORKING TIME

The Pump Working Time menu displays the working time of the slave pumps computed by the MUP drive based on the pump duty cycles. The user can set the pump working time in the special parameters (see the Pump Working Time Settings menu).

M621 Working Time for Pump 1

M621	Range	0 ÷ 2147483647	0 ÷ 429496729.4 sec
	Active	Always active.	
	Address	1951-1952 (LSWord, MSWord)	
	Function	The working time for Pump 1 is displayed.	

M623 Working Time for Pump 2

M623	Range	0 ÷ 2147483647	0 ÷ 429496729.4 sec
	Active	Always active.	
	Address	1953-1954 (LSWord, MSWord)	
	Function	The working time for Pump 2 is displayed.	

M625 Working Time for Pump 3

M625	Range	0 ÷ 2147483647	0 ÷ 429496729.4 sec
	Active	Always active.	
	Address	1955-1956 (LSWord, MSWord)	
	Function	The working time for Pump 3 is displayed.	

M627 Working Time for Pump 4

M627	Range	0 ÷ 2147483647	0 ÷ 429496729.4 sec
	Active	Always active.	
	Address	1957-1958 (LSWord, MSWord)	
	Function	The working time for Pump 4 is displayed.	

M629 Working Time for Pump 5

M629	Range	0 ÷ 2147483647	0 ÷ 429496729.4 sec
	Active	Always active.	
	Address	1959-1960 (LSWord, MSWord)	
	Function	The working time for Pump 5 is displayed.	

NOTE

If the Multimaster mode is activated, the working time for Pump 1 always relates to the pump that is currently working as the Master MUP; when the Master is changed over, the working time for P1 are changed with the working time for P2.

8.1.4. MULTIPUMP STATUS LIST

The Status List is the same as the standard Sinus Penta's (see the Status List table in the Sinus Penta's **Programming Instructions** manual). Two additional items are available:

- **34 Master Not Used** indicating that the plant is operating but the Master drive is not running.
- **35 MUP Time Out** indicating that the plant is inactive due to an adjusting timeout (see the Adjusting Timeout Menu).

8.2. Multipump References

In Master mode (**M605** = Master MUP), if no digital input is programmed as Multireference (**C619÷C621**) or as a source selector (**C179**), the PID regulator of the Multipump drive is sent the references from the sources programmed with **C285-C287**; the reference value results from the sum of these sources.

If a digital input is set as **C179 = MDIx**:

- **MDIx open**: the PID reference results from the sum of the first and third programmed source (**C285** and **C287**) and the control source results from the sum of the first and third programmed source (**C140** and **C142**);

- **MDIx closed**: the PID reference results from the sum of the second and third programmed source (**C286** and **C287**) and the control source results from the sum of the second and third programmed source (**C141** and **C142**).

If the Multireferences are set up, the reference obtained from the programmed sources depending on the Multireference function **P640**,

- will be summed up to the reference of the selected multireference (**P640** = Sum Ref.)
- will be replaced with the selected multireference (**P640** = Preset Ref.)
- will always be replaced by the multireference (**P640** = Exclusive Preset Ref.). If no multireference digital input is closed, the reference is zero.

If the Multipump drive is operating as a Slave (**M605 = Slave MUP**), the PID output is kept to the corresponding value sent from the Master drive via the serial link.

8.3. Pump Power Ratings Menu

8.3.1. Overview

The Pump Power Ratings menu includes the rated power of the slave pumps and the type of pumps being used (whether at controlled speed or not), as well as the operating conditions of the plant when the Master drive is disabled.

8.3.2. List of Parameters C600 to C607

Table 1: List of parameters C600 to C607.

Parameter	FUNCTION	User Level	MODBUS Address
C600	N. of Pumps in the Plant	BASIC	1346
C601	Power Ratings for Pump 2	BASIC	1347
C602	Power Ratings for Pump 3	BASIC	1348
C603	Power Ratings for Pump 4	BASIC	1349
C604	Power Ratings for Pump 5	BASIC	1350
C605	Plant Operating Mode	BASIC	1351
C606	Plant Disabled with Master Drive KO	ENGINEERING	1352
C607	Spare Pump Available	ENGINEERING	1353

C600 N. of Pumps in the Plant

C600			
	Range	1÷5	1÷ 5
	Default	1	1: Only P1
	Level	BASIC	
	Address	1346	
	Function	N. of pumps in the plant.	

C601 Power Ratings for Pump 2

C601			
	Range	0 ÷ 65000	0.0 ÷ 6500.0 kW
	Default	0	0.0 kW
	Level	BASIC	
	Address	1347	
	Function	Rated power for pump 2.	

C602 Power Ratings for Pump 3

C602			
	Range	0 ÷ 65000	0.0 ÷ 6500.0 kW
	Default	0	0.0 kW
	Level	BASIC	
	Address	1348	
	Function	Rated power for pump 3.	

C603 Power Ratings for Pump 4

C603			
	Range	0 ÷ 65000	0.0 ÷ 6500.0 kW
	Default	0	0.0 kW
	Level	BASIC	
	Address	1349	
	Function	Rated power for pump 4.	

C604 Power Ratings for Pump 5

C604	Range	0 ÷ 65000	0.0 ÷ 6500.0 kW
	Default	0	0.0 kW
	Level	BASIC	
	Address	1350	
	Function	Rated power for pump 5.	

C605 Type of Slave Pumps

C605	Range	0 ÷ 1	0: P2-P5 Variable Speed 1: P2-P5 Fixed Speed
	Default	1	1: P2-P5 Fixed Speed
	Level	BASIC	
	Address	1351	
	Function	This parameter sets the type of plant: 0: slave pumps P2-P5 operating at controlled speed (drive-controlled). 1: slave pumps P2-P5 not speed-controlled (direct starting or soft starter).	

C606 Plant Disabled with Master Drive KO

C606	Range	0 ÷ 2	0: No 1: Yes 2: No – Slave MUP Enabled
	Default	1	1: Yes
	Level	ENGINEERING	
	Address	1352	
	Function	This parameter sets the plant operation when the Master drive is in emergency conditions or is disabled. **0: No** → If the Master drive deactivates when an alarm trips or if it is disabled (the Enable Master contact is open), the plant operates through slave pumps P2-P5 unless an external alarm trips or a "min. threshold" fault of the analogue input set as 4-20mA occurs or a WATCHDOG from fieldbus or serial link (if configured with **R016** and **R005** respectively) trips. Even when deactivated, the Master MUP is still the plant supervisor. **1: Yes** → If the Master drive deactivates when an alarm trips or if it is disabled (the Enable Master contact is open), all pumps are shut off and the plant is locked until the cause responsible for the Master drive deactivation disappears. **2: No – MUP Slave Enabled** → As **0: No**, but the Slave MUP becomes the plant supervisor if its parameter **C606** is set to 2.	

NOTE Option 2 can be selected only after setting the serial communications parameters and after setting an MUP drive as "Pump 2".

NOTE The control source is programmed with the Control Method menu (see Sinus Penta's **Programming Instructions** manual). The same configuration is required for both the MUP drives. When an MUP drive is operating in slave mode, programming is overridden in the menu dedicated to sending the commands from the slave MUP drive via serial link.

C607 Spare Pump Available

C607	Range	0 ÷ 1	0: No 1: Yes
	Default	0	0: No
	Level	ENGINEERING	
	Address	1353	
	Function	If **C607**=1: Yes, the system works at its maximum rating; the number of operating pumps is the one in **C600** [N. of Pumps in the Plant] – 1. This means that one of the preset pumps is not activated, but operates only when one of the three pumps fails.	

NOTE If the spare pump is available, it turns on/off whenever the plant is turned on/off to evenly share the working time of all the connected pumps.

NOTE If the preset pumps have different power ratings, the power rating of the spare pump is referred to the power rating of pump 1.

8.4. By-Pass Manager Menu

8.4.1. Overview

This menu allows disabling the automatic control of the connected pumps and allows forcing their manual operation.

8.4.2. List of Parameters C610 and C611

Table 2: List of parameters C610 and C611.

Parameter	FUNCTION	User Level	MODBUS Address
C610	Enable By-passing Pump Automatic Control	BASIC	1356
C611	Enable Pumps	BASIC	1357

C610 Enable By-passing Pump Automatic Control

C610	Range	0÷1	0: No 1: Yes
	Default	0	0: No
	Level	BASIC	
	Address	1356	
	Function	Set **C610** = [1: Yes] to override the automatic control of the pumps and to manually force both their startup (**C611**) and their operating speed (**P625**, when slave pumps at controlled speed are used).	

C611 Manual Pump Start

C611	Range	0 ÷ 31 decimal 00000b ÷ 11111 binary 00h ÷ 1F h hexadecimal	On/Off Pump bit allocation 0: Off 1: On Bit 0 → Pump 1 Bit 1 → Pump 2 Bit 2 → Pump 3 Bit 3 → Pump 4 Bit 4 → Pump 5
	Default	0	All Pumps Off
	Level	BASIC	
	Address	1357	
	Function	This parameter allows selecting the operating conditions of the plant pumps in manual mode (**C610** = [1: Yes]). When variable speed pumps are used, their speed setpoint must be set up with **P625**.	

8.5. MUP Digital Inputs Menu

8.5.1. Overview

This menu sets the digital inputs allocated to the slave pumps (Slave P2 OK to Slave P5 OK). If controlled-speed slave pumps are used, signals to the digital inputs consist of the Inverter OK contact of the slave drives, whereas if fixed speed pumps are used, signals to the digital inputs consist of the feedback of the pump thermal protection (PTC or thermal/magnetic circuit breaker). When using a Multipump plant with a serial link between the Master drive and the Slave drives, parameters **C615** to **C618** (relating to the slave pumps) must be set accordingly: properly set the serial link remote control to [9: Serial Link] and the communications parameters (see the Master Serial Link Menu).
Up to three digital inputs can be set as Multireference. Their combination allows sending up to seven reference values to the Master drive. These values can be used as a unique reference or can be summed up to the other selected sources (see the Multireferences Menu).

8.5.2. List of Parameters C615 to C623

Table 3: List of parameters C615 to C623.

Parameter	FUNCTION	User Level	MODBUS Address
C615	Input for Pump 2 OK	BASIC	1361
C616	Input for Pump 3 OK	BASIC	1362
C617	Input for Pump 4 OK	BASIC	1363
C618	Input for Pump 5 OK	BASIC	1364
C619	Input for Multireference 1	ENGINEERING	1365
C620	Input for Multireference 2	ENGINEERING	1366
C621	Input for Multireference 3	ENGINEERING	1367
C622	Input for Speed Reference Enable	ENGINEERING	1368
C623	Slave Multipump Input	ENGINEERING	1369

NOTE

If the remote control of the slave drives must be used by the Multipump drive (Master drive), set **C615-C618** (digital input for Pump OK) to **9=[Serial Link]** and set the same Baud Rate, stop bit number and parity for all the connected drives, as well as their device addresses. Also, set the relevant parameters in the Master Serial Link menu accordingly.

C615/616/617/618 Digital Input Available for Pump 2/3/4/5 OK

C615 C616 C617 C618	Range	0 ÷ 9	0: Inactive 1: MDI1 ÷ 8: MDI8 9: Serial Link
	Default	C615 → 4 C616 → 5 C617 → 6 C618 → 7	C615 → 4: MDI4 C616 → 5: MDI5 C617 → 6: MDI6 C618 → 7: MDI7
	Level	BASIC	
	Address	C615 → 1361 C616 → 1362 C617 → 1363 C618 → 1364	
	Function	Allocation of the digital input receiving the "Pump OK" signal. No other function can be allocated to the digital input. If "Serial Link" is selected, the reference, command, status signals of the slave pumps are exchanged via serial link using the Modbus RTU protocol (see the Master Serial Link Menu).	

C619/620/621 Digital Input for Multireference 1/2/3

C619, C620, C621	Range	0 ÷ 16 0 ÷ 24 when ES847 or ES870 is fitted	0 → Inactive 1 ÷ 8 → MDI1 ÷ MDI8 9 ÷ 12 → MPL1 ÷ MPL4 13 ÷ 16 → TFL1 ÷ TFL4 17 ÷ 24 → XMDI1 ÷ XMDI8
	Default	0	Inactive
	Level	ENGINEERING	
	Address	C619 → 1365 C620 → 1366 C621 → 1367	
	Function	Allocation of the digital input used as Multireference (see the Multireferences Menu).	

C622 Input for Speed Reference Enable

C622	Range	0 ÷ 16 0 ÷ 24 when ES847 or ES870 is fitted	0 → Inactive 1 ÷ 8 → MDI1 ÷ MDI8 9 ÷ 12 → MPL1 ÷ MPL4 13 ÷ 16 → TFL1 ÷ TFL4 17 ÷ 24 → XMDI1 ÷ XMDI8
	Default	0	Inactive
	Level	ENGINEERING	
	Address	1368	
	Function	Allocation of the digital input used as "speed reference enable". The speed reference being used is selected with the Control Method menu (see Sinus Penta's **Programming Instructions** Manual). If the selected input is active, the PID is disabled and the speed reference is the one defined in the Control Method menu.	

C623 Slave Multipump Input

C623	Range	0 ÷ 16 0 ÷ 24 when ES847 or ES870 is fitted	0 → Inactive 1 ÷ 8 → MDI1 ÷ MDI8 9 ÷ 12 → MPL1 ÷ MPL4 13 ÷ 16 → TFL1 ÷ TFL4 17 ÷ 24 → XMDI1 ÷ XMDI8
	Default	0	Inactive
	Level	ENGINEERING	
	Address	1369	
	Function	Allocation of the digital input used as Slave Multipump. In the same plant, if two Multipump drives are connected via serial link, the first drive that detects when the Slave Multipump input closes will disable the pump Manager and will acknowledge the reference and commands sent from the Multipump Master via serial link. When the plant is operating, if the Master Multipump drive is not available (off), the Slave Multipump drive becomes the Master and takes control of the plant. See Multimaster Wiring Diagram (2 MUP Drives).	

NOTE

When the digital output configured as Master Multipump is activated, if the drive detects that the Slave Multipump digital input is activated, alarm "**A124** Master Conflict" will trip, because a conflict is occurring between the two Multipump drives installed in the plant (both drives are operating as Master drives). Check programming and wiring of the digital inputs/outputs set as Slave/Master Multipump for both drives implementing the MUP firmware.

8.6. Pump Working Time Settings Menu

8.6.1. Overview

This menu includes the parameters required for setting the working time of the plant pumps.

NOTE The pump on/off time periods and their working time difference (**P621**) depend on the actual working time of the pumps; as a result, the working time of the plant pumps can be set up either when the plant is not operating or for the pumps that are not currently operating (the Slave P2-5 OK signal is inactive).

NOTE This menu can be accessed only when the system is in Master mode (**M605** = MUP Master).

8.6.2. List of Inputs I021 and I022

Table 4: List of inputs I021 and I022

Parameter	FUNCTION	User Level	MODBUS Address
I021	Working Time to be Allocated	ADVANCED	1408
I022	Pumps to be Allocated to the Working Time	ADVANCED	1409

I021 Working Time to be Assigned

C630	Range	–1 ÷ 32000	–1 [Auto] ÷ 32000h
	Default	–1	[Auto]
	Level	ADVANCED	
	Address	1408	
	Function	This parameter sets the working time to be assigned to the pumps selected with **I022**. When the default value [Auto] is assigned, the pump working time is automatically refreshed based on the actual duty cycles of the pumps. When a working time included between 0 and 32000 hours is set up, parameter **I022** can be used to select the pump(s) to be assigned to this working time.	

I022 Pump Selected for the Working Time to be Assigned

C631	Range	0 ÷ 31 decimal 00000b ÷ 11111 binary 00h ÷ 1F h hexadecimal	Bit allocation 0: Irrelevant 1: Active selection Bit 0 → Pump 1 Bit 1 → Pump 2 Bit 2 → Pump 3 Bit 3 → Pump 4 Bit 4 → Pump 5
	Default	0	0: No pump selected
	Level	ADVANCED	
	Address	1409	
	Function	This bit-controlled parameter allows selecting the pumps to be assigned to the working time set in **I021**.	

NOTE First set **I021**, then **I022**. When all pumps are assigned to their working time, both **I021** and **I022** are automatically restored to their default value.

8.7. Master Serial Link Menu

8.7.1. OVERVIEW

This menu defines the parameters to be set up in order to control the slave drives/soft starters via serial link.

If the drives/soft starters being used are manufactured by Elettronica Santerno, the system will use preset parameter values required for serial communications. The user will only have to set the value to be exchanged via serial link and corresponding to the maximum setpoint for the slave pump. Also, the serial address of the drive is to be set up.

On the other hand, if the drives/soft starters being used are not produced by Elettronica Santerno, set the Type of Drive as **Generic** and set the specific parameters for reference control, state control, RUN/STOP command.

The plant wiring is more simple when a serial link is used.

NOTE

Do the following when using the Multipump drive (Master drive) for the remote control of the slave drives:

- set **C615÷C618** (digital input for Pump OK) to **9=[Serial Link]**;
- set the same Baud Rate, stop bit number and parity for all the connected drives; set the correct device addresses for al the connected drives.

CAUTION

If serial communications is configured for the system control (Pump OK, **C615** to **C618** = 9 [Serial Link]) the control board will use the MODBUS communications protocol in MASTER mode.
This will prevent the system from communicating with the serial link concerned, e.g. with the Remote Drive.
To disable the MODBUS Master mode (and to enable serial communications again), deactivate the Serial Link mode in parameters **C615** to **C618**.

8.7.2. LIST OF PARAMETERS C650 TO C695

Table 5: List of parameters C650 to C695.

Parameter	FUNCTION	User Level	MODBUS Address
C650	Pump 2, Type of Drive	BASIC	1086
C651	Pump 2, Device Address	BASIC	1087
C652	Pump 2, Address for Reference	BASIC	1088
C653	Pump 2, Address for Command	BASIC	1089
C654	Pump 2, Address for Status Detection	BASIC	1090
C655	Pump 2, Value for Max. Reference	BASIC	1091
C656	Pump 2, Value for Run Command	BASIC	1092
C657	Pump 2, Value for Stop Command	BASIC	1093
C658	Pump 2, Value for Status Test OK	BASIC	1094
C659	Pump 2, Logic for Status Test OK	BASIC	1095
C662	Pump 3, Type of Drive	BASIC	1098
C663	Pump 3, Device Address	BASIC	1099
C664	Pump 3, Address for Reference	BASIC	1100
C665	Pump 3, Address for Command	BASIC	1101
C666	Pump 3, Address for Status Detection	BASIC	1102
C667	Pump 3, Value for Max. Reference	BASIC	1103
C668	Pump 3, Value for RUN Command	BASIC	1104
C669	Pump 3, Value for STOP Command	BASIC	1105
C670	Pump 3, Value for Status Test OK	BASIC	1106
C671	Pump 3, Logic for Status Test OK	BASIC	1107
C674	Pump 4, Type of Drive	BASIC	1110
C675	Pump 4, Device Address	BASIC	1111
C676	Pump 4, Address for Reference	BASIC	1112
C677	Pump 4, Address for Command	BASIC	1113
C678	Pump 4, Address for Status Detection	BASIC	1114
C679	Pump 4, Value for Max. Reference	BASIC	1115
C680	Pump 4, Value for Run Command	BASIC	1116
C681	Pump 4, Value for Stop Command	BASIC	1117
C682	Pump 4, Value for Status OK Test	BASIC	1118
C683	Pump 4, Logic for Status OK Test	BASIC	1119
C686	Pump 5, Type of Drive	BASIC	1122
C687	Pump 5, Device Address	BASIC	1123
C688	Pump 5, Address for Reference	BASIC	1124
C689	Pump 5, Address for Command	BASIC	1125
C690	Pump 5, Address for Status Detection	BASIC	1126
C691	Pump 5, Value for Max. Reference	BASIC	1127
C692	Pump 5, Value for Run Command	BASIC	1128
C693	Pump 5, Value for Stop Command	BASIC	1129
C694	Pump 5, Value for Status Test OK	BASIC	1130
C695	Pump 5, Logic for Status Test OK	BASIC	1131

NOTE To access the parameters above, set parameters **C615-C618** "Digital Input for Pump OK" to [9: Serial Link].

C650 (C662; C674; C686) Pump 2 (3; 4; 5), Type of Drive

C650 (C662; C674; C686)	Range	0 ÷ 5 0 ÷ 6 (for C650 only)	0: Generic 1: Sinus Penta 2: Sinus K 3: Orion Drive, Sinus N and Sinus M 4: Vega Drive 5: ASAB/ASAC 6: MUP Sinus Penta (for C650 only)
	Default	0	0: Generic
	Level	BASIC	
	Address	1086 (1098; 1110; 1122)	
	Function	Allocation of the Type of Drive controlling the slave pump. If an ASAB/ASAC soft starter is used, all the parameters required for serial communications are preconfigured when this parameter is set up. If a drive manufactured by Elettronica Santerno is used, all the parameters required for serial communications, except for the value corresponding to the maximum speed reference to be sent via serial communications, are preset when this parameter is set up. Note 0: If the soft starter being used is not manufactured by Elettronica Santerno, set the speed reference as Not Present to ensure correct data exchange. Note 1: Set the same baud rate, parity and stop bit number for all drives. Note 2: Option N. 6 (Sinus Penta MUP) can be set up for Pump 2 only.	

CAUTION

For the Orion Drive and the Sinus N, the unprogrammable settings in their Modbus protocol are Parity No and 1 Stop Bit, which are incompatible with the Vega Drive and the Sinus M. Always consider serial communications compatibility when controlling the plant via serial link.

C651 (C663; C675; C687) Pump 2 (3; 4; 5), Device Address

C651 (C663; C674; C687)	Range	0 ÷ 255	0 ÷ 255
	Default	2 (3; 4; 5)	2 (3; 4; 5)
	Level	BASIC	
	Address	1087 (1099; 1111; 1123)	
	Function	Serial address of the slave drive.	

CAUTION

Set the corresponding Device Address for the Slave drive as well.

C652 (C664; C676; C688) Pump 2 (3; 4; 5), Address for Reference

C652 (C664; C676; C688)	Range	0 ÷ 65001	0 ÷ 65001=[Not Present]
	Default	0	0
	Level	BASIC	
	Address	1088 (1100; 1112; 1124)	
	Function	Modbus address for the speed reference of the slave drive. If a soft starter is used, set this parameter as 65001 : [Not Present].	

CAUTION For the Slave drive, set the speed reference sent via serial link.

C653 (C665; C677; C689) Pump 2 (3; 4; 5), Address for Command

C653 (C665; C677; C689)	Range	0 ÷ 65000	0 ÷ 65000
	Default	0	0
	Level	BASIC	
	Address	1089 (1101; 1113; 1125)	
	Function	Modbus address for the command of the slave drive.	

CAUTION For the Slave drive, set the command sent via serial link.

C654 (C666; C678; C690) Pump 2 (3; 4; 5), Address for Status Detection

C654 (C666; C678; C690)	Range	0 ÷ 65000	0 ÷ 65000
	Default	0	0
	Level	BASIC	
	Address	1090 (1102; 1114; 1126)	
	Function	Modbus address allowing detecting the status of the slave drive (“Inverter OK” status).	

C655 (C667; C679; C691) Pump 2 (3; 4; 5), Value for Max. Reference

C655 (C667; C679; C691)	Range	0 ÷ 65000	0 ÷ 65001: Not Present
	Default	0	0
	Level	BASIC	
	Address	1091 (1103; 1115; 1127)	
	Function	Value to be sent via serial link and corresponding to the maximum reference for the Slave drive. Example: if a Sinus K is used, and if the maximum allowable frequency is 50Hz, this parameter is to be set to "500", which is the value exchanged via serial link and, if properly scaled, this value matches with the desired reference value. Examples for the drives manufactured by Elettronica Santerno:	

Type of Drive	Required Value	Value to be programmed
Sinus Penta	1500rpm	1500
Sinus K	50.0Hz	500
Orion Drive	50.00Hz	5000
Vega Drive	50.00Hz	5000
Sinus N	50.00Hz	5000
Sinus M	50.00Hz	5000

C656 (C668; C680; C692) Pump 2 (3; 4; 5), Value for RUN Command

C656 (C668; C680; C692)	Range	0 ÷ 65000	0 ÷ 65000
	Default	0	0
	Level	BASIC	
	Address	1092 (1104; 1116; 1128)	
	Function	Value to be sent via serial link and corresponding to the RUN command for the Slave drive.	

C657 (C669; C681; C693) Pump 2 (3; 4; 5), Value for STOP Command

C657 (C669; C681; C693)	Range	0 ÷ 65000	0 ÷ 65000
	Default	0	0
	Level	BASIC	
	Address	1093 (1105; 1117; 1129)	
	Function	Value to be sent via serial link and corresponding to the STOP command for the Slave drive.	

C658 (C670; C682; C694) Pump 2 (3; 4; 5), Value for Status OK Test

C658 (C670; C682; C694)	Range	0 ÷ 65000	0 ÷ 65000
	Default	0	0
	Level	BASIC	
	Address	1094 (1106; 1118; 1130)	
	Function	Value to be detected via serial link in order to check the status of Slave Drive OK (the drive is available and ready to start).	

C659 (C671; C683; C695) Pump 2 (3; 4; 5), Logic for Status OK Test

C659 (C671;C683; C695)	Range	0 ÷ 1	0:[True] ÷ 1:[False]
	Default	0	0: [True]
	Level	BASIC	
	Address	1095 (1107; 1119; 1131)	
	Function	Test logic to check the status of Slave Drive OK (the drive is available and ready to start). Example: **C658** = 5 ; **C659** = 1:[False]. The drive of Pump 2 is detected as ready to start only if the status detected via serial link at the address set in **C654** is other than 5.	

8.8. Mains Loss Menu

8.8.1. Overview

This menu allows enabling the Mains Loss alarm when a mains loss is detected.

8.8.2. Parameter C699

Table 6: Parameter C699.

Parameter	FUNCTION	User Level	MODBUS Address
C699	Mains Loss Alarm Enabled	ADVANCED	1135

C699 Mains Loss Alarm Enabled

C699	Range	0÷1	0: No 1: Yes
	Default	1	1: Yes
	Level	ADVANCED	
	Address	1135	
	Function	If **C699** = [1: Yes], alarm **A064** Mains Loss trips when a mains loss is detected.	

8.9. Auxiliary Digital Outputs Menu

8.9.1. Overview

This menu allows selecting the activation modes of the 6 available digital outputs (transistor, open collector or relay outputs) located on the optional control board (if fitted).

CAUTION To enable the optional control board, set the relevant parameter in the Expansion Board Configuration menu (see the Sinus Penta's **Programming Instructions** manual).

NOTE The available parameters are a subset of the menu for the standard outputs of the Penta drive.
Only digital variables and the logic level of the outputs can be selected.

8.9.2. List of Parameters P306 to P317

Table 7: List of parameters P306 to P317.

Parameter	FUNCTION	User Level	MODBUS Address
P306	XMDO1: Variable Selection	ENGINEERING	906
P307	XMDO1: Output Logic Level	ENGINEERING	907
P308	XMDO2: Variable Selection	ENGINEERING	908
P309	XMDO2: Output Logic Level	ENGINEERING	909
P310	XMDO3: Variable Selection	ENGINEERING	910
P311	XMDO3: Output Logic Level	ENGINEERING	911
P312	XMDO4: Variable Selection	ENGINEERING	912
P313	XMDO4: Output Logic Level	ENGINEERING	913
P314	XMDO5: Variable Selection	ENGINEERING	914
P315	XMDO5: Output Logic Level	ENGINEERING	915
P316	XMDO6: Variable Selection	ENGINEERING	916
P317	XMDO6: Output Logic Level	ENGINEERING	917

Table 8: List of the selectable digital signals for auxiliary digital outputs.

Selectable Value	Description
D0	See Sinus Penta's **Programming Instructions** manual
…	
D37	
D38	Reserved
D39	Reserved
D40	Reserved
D41	See Sinus Penta's **Programming Instructions** manual
…	
D59	
D60	Adjusting Timeout
D61	All pumps ON
D62	Pump 2 ON
D63	Pump 3 ON
D64	Pump 4 ON
D65	Pump 5 ON
D66	Master Multipump Drive
D67	Serial Communications KO

P306 XMDO1 → Variable Selection

P306			
	Range	0 ÷ 67	See Table 8
	Default	0	D0: Disable
	Level	ENGINEERING	
	Address	906	
	Function	Selection of the signal allocated to XMDO1 digital output.	

P307 XMDO1 → Output Logic Level

P307			
	Range	0 ÷ 1	0: [False] ÷ 1: [True]
	Default	1	1: [True]
	Level	ENGINEERING	
	Address	907	
	Function	Logic of the digital signal allocated to XMDO1 (false or true).	

P308 XMDO2→ Variable Selection

P308			
	Range	0 ÷ 67	See Table 8
	Default	0	D0: Disable
	Level	ENGINEERING	
	Address	908	
	Function	Selection of the signal allocated to XMDO2 digital output.	

P309 XMDO2→ Output Logic Level

P309			
	Range	0 ÷ 1	0: [False] ÷ 1: [True]
	Default	1	1: [True]
	Level	ENGINEERING	
	Address	909	
	Function	Logic of the digital signal allocated to XMDO2 (false or true).	

P310 XMDO3 → Variable Selection

P310	Range	0 ÷ 67	See Table 8
	Default	0	D0: Disable
	Level	ENGINEERING	
	Address	910	
	Function	Selection of the signal allocated to XMDO3 digital output.	

P311 XMDO3 → Output Logic Level

P311	Range	0 ÷ 1	0: [False] ÷ 1: [True]
	Default	1	1: [True]
	Level	ENGINEERING	
	Address	911	
	Function	Logic of the digital signal allocated to XMDO3 (false or true).	

P312 XMDO4 → Variable Selection

P312	Range	0 ÷ 67	See Table 8
	Default	0	D0: Disable
	Level	ENGINEERING	
	Address	912	
	Function	Selection of the signal allocated to XMDO4 digital output.	

P313 XMDO4 → Output Logic Level

P313	Range	0 ÷ 1	0: [False] ÷ 1: [True]
	Default	1	1: [True]
	Level	ENGINEERING	
	Address	913	
	Function	Logic of the digital signal allocated to XMDO4 (false or true).	

P314 XMDO5 → Variable Selection

P314	Range	0 ÷ 67	See Table 8
	Default	0	D0: Disable
	Level	ENGINEERING	
	Address	914	
	Function	Selection of the signal allocated to XMDO5 digital output.	

P315 XMDO5 → Output Logic Level

P315	Range	0 ÷ 1	0: [False] ÷ 1: [True]
	Default	1	1: [True]
	Level	ENGINEERING	
	Address	915	
	Function	Logic of the digital signal allocated to XMDO5 (false or true).	

P316 XMDO6 → Variable Selection

P316	Range	0 ÷ 67	See Table 8
	Default	0	D0: Disable
	Level	ENGINEERING	
	Address	916	
	Function	Selection of the signal allocated to XMDO6 digital output.	

P317 XMDO6 → Output Logic Level

P317	Range	0 ÷ 1	0: [False] ÷ 1: [True]
	Default	1	1: [True]
	Level	ADVANCED	
	Address	917	
	Function	Logic of the digital signal allocated to XMDO6 (false or true).	

8.10. Fieldbus Parameters Menu

8.10.1. Overview

NOTE

For a detailed description of the communications protocol, the hardware interface, the supported functions, and so on, please refer to the Fieldbus sections in the Sinus Penta's Installation Instructions manual and Programming Instructions manual.

NOTE

This section covers the fieldbus requirements for the Sinus Penta's Multipump application software.

8.10.2. List of Parameters P330 and P331

Table 9: List of parameters P330 and P331.

Parameter	FUNCTION	User Level	MODBUS Address
P330	Measure 3 from the Fieldbus	ENGINEERING	930
P331	Measure 4 from the Fieldbus	ENGINEERING	931

P330 Measure 3 from the Fieldbus

P330			
	Range	0 ÷ 91 92 ÷ 128	NONE ÷ M090 M600 ÷ M636
	Default	22	M021 PID Feedback %
	Level	ENGINEERING	
	Address	930	
	Function	Measure 3 exchanged from the fieldbus can be user-defined and can be selected with P330 among standard Sinus Penta's M000 to M090 and Multipump M600 to M636. The selected measure is: P330 ≤ 90 M0xx = (M000 + P330). P330 > 90 M6xx = (M600 + P330 – 91). Measure 3 is set to PID Feedback % by default: M021 = (M000 + P330) = (M000 + 21).	

NOTE

The unit of measure and the scaling ratio are given in the Range field in the table describing the selected measure.
For M0xx measures, please refer to the Sinus Penta's Programming Instructions manual; for M6xx measures, refer to the Measures Menu covered in this manual.

P331 Measure 4 from the Fieldbus

P331	Range	0 ÷ 91 92 ÷ 128	NONE ÷ M090 M600 ÷ M636
	Default	23	M022 PID Output %
	Level	ENGINEERING	
	Address	931	
	Function	Measure 3 exchanged from the fieldbus can be user-defined and can be selected with P331 among standard Sinus Penta's M000 to M090 and Multipump M600 to M636. The selected measure is: P330 ≤ 90 M0xx = (M000 + P330). P330 > 90 M6xx = (M600 + P330 – 91). Measure 4 is set to PID Output % by default: M022 = (M000 + P331) = (M000 + 22).	

NOTE

The unit of measure and the scaling ratio are given in the Range field in the table describing the selected measure.
For M0xx measures, please refer to the Sinus Penta's Programming Instructions manual; for M6xx measures, refer to the Measures Menu covered in this manual.

8.11. Adjusting Range Menu

8.11.1. Overview

This menu includes the parameters allowing setting the minimum and maximum frequency required for the operation of variable-speed pumps. If the operating frequency of the variable-speed pumps is lower than/(higher than) or equal to the minimum/(maximum) threshold set in **P600**/(**P601**) for a time longer than **P602**, the system will stop/(start) one of the operating/(available) pumps.

8.11.2. List of Parameters P600 to P602

Table 10: List of parameters P600 to P602.

Parameter	FUNCTION	User Level	MODBUS Address
P600	Minimum Operating Frequency	BASIC	950
P601	Maximum Operating Frequency	BASIC	951
P602	Configuration Changeover Delay due to Out of Range Values	BASIC	952

<u>P600 Minimum Operating Frequency</u>

P600			
	Range	0 ÷ 100	0 ÷ 100%
	Default	0	0%
	Level	BASIC	
	Address	950	
	Function	Sets the minimum operating frequency for the connected pumps. If set to 0% (default), **P600** has no effect. Frequency is expressed as a percentage of the rated motor frequency (**C015**). <u>Slave pumps at variable speed</u>: Example: If **P600** = 50%, **C015** = 50Hz then the minimum operating frequency of the connected pumps is 25Hz. If during operation 4 pumps are operating at 20Hz and this speed continues for the time set in **P602**, the Primary Master drive would stop one pump and would increase the speed of the remaining three operating pumps to 25Hz. This procedure would be repeated until the operating frequency of the active pumps would range between **P600** and **P601** (maximum operating frequency). <u>Slave pumps at fixed speed</u>: **P600** is the minimum operating frequency for the Variable Speed Master pump only. It also defines the criteria for the selection of the slave fixed speed pumps. Example: If **P600** = 30%, the system will choose the slave fixed speed pump configuration allowing the Master pump to operate at a frequency higher than the value set in **P600** and lower than the value set in **P601**. If the operating frequency of the Master pump is not within the preset range [**P600**-**P601**] for the time set in **P602**, the configuration of the slave fixed speed pumps is changed to meet the new operating requirements.	

NOTE

The minimum value to be set for this parameter must be ≥ **P237** (Min. PID Out) and is refreshed if **P237** exceeds the value set in **P600**.

To avoid any malfunction, the value to be set for **P600** should comply to:

$$P600 \leq \frac{(C600 - 1)}{C600} \times 100 \quad [*]$$

NOTE

Example: **C600** = 5 pumps (the output power of each pump is 20%). As a result, **P600** should be set to ≤ 80%.

If the formula above **[*]** is not fulfilled, then continuous activation/deactivation of the available pumps can occur depending on **P605**.

P601 Maximum Operating Frequency

P601			
	Range	0 ÷ 100	0 ÷ 100%
	Default	0	100%
	Level	BASIC	
	Address	951	
	Function	Sets the maximum operating frequency for the connected pumps. If set to 0% (default), **P601** has no effect. Frequency is expressed as a percentage of the rated motor frequency (**C015**). Slave pumps at variable speed: Example: If **P601** = 80%, **C015** = 50Hz, then the maximum operating frequency of the connected pumps is 40Hz. If during operation 4 pumps are operating at 45Hz and this speed continues for the time set in **P602**, the Primary Master drive would start one pump (if available) and would search for the new operating conditions. This procedure would be repeated until the operating frequency of the active pumps would range between **P600** (minimum operating frequency) and **P601**. Slave pumps at fixed speed: **P601** is the maximum operating frequency for the Master pump only. It also defines the criteria for the selection of the slave fixed speed pumps. Example: If **P601** = 80%, the system will choose the slave fixed speed pump configuration allowing the Master pump to operate at a frequency higher than the value set in **P600** and lower than the value set in **P601**. If the operating frequency of the Master pump is not within the preset range [**P600**-**P601**] for the time set in **P602**, the configuration of the slave fixed speed pumps is changed to meet the new operating requirements.	

P602 Configuration Changeover Delay due to Out of Range Values

P602	Range	0 ÷ 65000	0.0 ÷ 6500.0sec
	Default	50	5.0sec
	Level	BASIC	
	Address	952	
	Function	Delay time for the configuration changeover of On/Off pumps when the frequency of the active variable-speed pumps is not included in the preset frequency range.	

NOTE

The time set in parameter **P602** must be shorter than the time set in parameter **P255**, thus preventing the system from stopping the pumps before changing their current ON/OFF configuration.

8.12. Adjusting Error Menu

8.12.1. Overview

This menu sets the maximum adjusting error and its check time. The On/Off configuration is changed both for the operation of the system when at least one variable-speed pump is available (**P605** and **P606**) and for the operation of the system when only the fixed-speed pumps are operating (Master pump out of order—**P610** and **P611**).
This menu also includes a parameter allowing entering an adjusting dead zone (where the adjusting error is null).

8.12.2. List of Parameters P605 to P612

Table 11: List of parameters P605 to P612.

Parameter	FUNCTION	User Level	MODBUS Address
P605	Max. Adjusting Error with P2-5 at Variable Speed	BASIC	955
P606	Configuration Changeover Delay due to Max. Error with P2-5 at Variable Speed	BASIC	956
P610	Max. Adjusting Error with P2-5 at Fixed Speed	BASIC	960
P611	Configuration Changeover Delay due to Max. Error with P2-5 at Fixed Speed	BASIC	961
P612	Semiamplitude of the Adjusting Dead Zone	BASIC	962

P605 Max. Adjusting Error with P2-5 at Variable Speed

P605			
	Range	0 ÷ 1000	0.0 ÷ 100.0 %
	Default	20	2.0%
	Level	BASIC	
	Address	955	
	Function	The delay time count starts when the system is working at variable speed and this adjusting error threshold (considered as an absolute value) is exceeded. A configuration changeover occurs if the value set in **P606** is exceeded. The current adjusting error is visible in measure **M021** (Percent Error).	

P606 Configuration Changeover Delay due to Max. Error with P2-5 at Variable Speed

P606			
	Range	0 ÷ 65000	0.0 ÷ 6500.0 sec.
	Default	100	10.0 sec.
	Level	BASIC	
	Address	956	
	Function	Maximum time when the adjusting error condition persists for a time longer than the max. error (**P605**) allowed before changing the On/Off configuration of the plant pumps when working at variable speed.	

P610 Max. Adjusting Error with P2-5 at Fixed Speed

P610	Range	0 ÷ 1000	0.0 ÷ 100.0 %
	Default	20	2.0%
	Level	BASIC	
	Address	960	
	Function	The delay time count starts if this adjusting error threshold (considered as an absolute value) is exceeded when the fixed-speed pumps are operating; if the value set in **P611** is exceeded, a configuration changeover occurs. The current adjusting error is visible in measure **M021** (Percent Error).	

P611 Configuration Changeover Delay due to Max. Error with P2-5 at Fixed Speed

P611	Range	0 ÷ 65000	0.0 ÷ 6500.0 sec.
	Default	100	10.0 sec.
	Level	BASIC	
	Address	961	
	Function	Maximum time when the adjusting error condition persists for a time longer than the max. adjusting error (**P610**) allowed before changing the On/Off configuration of the plant pumps when only the fixed-speed pumps are working.	

P612 Semiamplitude of the Adjusting Dead Zone

P612	Range	0 ÷ 1000	0.0 ÷ 100.0 %
	Default	0	0.0%
	Level	BASIC	
	Address	962	
	Function	Semiamplitude of the adjusting dead zone. The adjusting errors with an absolute value under **P612** will be considered as null.	

8.13. Adjusting Timeout Menu

8.13.1. Overview

This menu sets the maximum allowable timeout (**P616**) for adjusting errors (**P615**) before the adjusting timeout countdown starts and before choosing what to do when this happens (plant deactivation or warning only).

8.13.2. List of Parameters P615 to P617

Table 12: List of parameters P615 to P617.

Parameter	FUNCTION	User Level	MODBUS Address
P615	Timeout Indication Error	ENGINEERING	965
P616	Timeout Indication Delay	ENGINEERING	966
P617	Plant Deactivation due to Adjusting Timeout	ENGINEERING	967

P615 Timeout Indication Error

P615	Range	0 ÷ 1000	0.00% [Disabled function] ÷ 100.0%
	Default	0	DISABLE
	Level	ENGINEERING	
	Address	965	
	Function	Error threshold for checking the adjusting timeout.	

P616 Timeout Indication Delay

P616	Range	0 ÷ 65000	0.0 ÷ 6500.0 sec.
	Default	0	0.0 sec.
	Level	ENGINEERING	
	Address	966	
	Function	Maximum delay time for the adjusting timeout when the adjusting error exceeds **P615** (error threshold for checking the adjusting timeout).	

P617 Plant Deactivation due to Adjusting Timeout

P617	Range	0 ÷ 1	0 :[No] Indication only 1 :[Yes] Plant deactivation
	Default	0	0: [No]
	Level	ENGINEERING	
	Address	967	
	Function	Allows sending a warning indication or allows deactivating the whole plant.	

8.14. Special Functions Menu

8.14.1. Overview

This menu includes the parameters implementing special functions, as described below.

8.14.2. List of Parameters P620 to P625

Table 13: List of parameters P620 to P625.

Parameter	FUNCTION	User Level	MODBUS Address
P620	Min. Time Between a Configuration Changeover and the Next	BASIC	970
P621	Maximum Difference among Pump Working Time	BASIC	971
P622	Exponent of the Load Curve	BASIC	972
P623	Min. Pump Operating Speed	BASIC	973
P624	Load Loss Compensation at Max. Delivery	BASIC	974
P625	Pump Reference with Enabled By-Pass	BASIC	975

P620 Min. Time Between a Configuration Changeover and the Next

P615	Range	0 ÷ 65000	0 : [Deactivated function] ÷ 6500.0 sec
	Default	0	0 : [Deactivated function]
	Level	BASIC	
	Address	970	
	Function	Min. time passing between an On/Off pump configuration and the next.	

P621 Maximum Difference among Pump Working Time

P621	Range	0 ÷ 1000	0 : [Deactivated function] ÷ 1000 h.
	Default	10	10 h
	Level	BASIC	
	Address	971	
	Function	Maximum difference among the working time of the available pumps. If **P621** is set to 0, this function is disabled: whenever a pump On/Off configuration is performed, the pump that has been working for the shortest time is activated, while the pump that has been working for the longest time is shut off. When **P621** is other than zero, the system also checks the difference among the working time of the available pumps. If the difference in working time between a working pump and an available inactive pump is greater than the value set in **P621**, the active pump automatically is shut off and the inactive available pump is started up.	

P622 Exponent of the Load Curve

P622	Range	0 ÷ 1000	0 ÷ 10.00
	Default	100	1.00
	Level	BASIC	
	Address	972	
	Function	This parameter defines the exponent of the curve representing the relationship between the controlled variable and the RPM and allows precompensating the speed reference of the controlled-speed pumps so as to obtain the smoothest response from the PI(D) regulator. Typically, when controlling the delivery of a pump, the Delivery-Rpm relationship can be approximated to smooth operation (**P622** = 1.00), whereas if the pressure of a pump is controlled, the relationship between Discharge head–Rpm is normally a quadratic trend (**P622** = 2.00).	

P623 Min. Pump Operating Speed

P623	Range	0 ÷ 100	0 ÷ 100%
	Default	0	0%
	Level	BASIC	
	Address	973	
	Function	This is the minimum speed reference for the saturation of the speed reference for the controlled-speed pumps.	

NOTE The value set in **P623** cannot be higher than the value set in **P237** (Min. PID Out), and is updated run-time if the value in **P237** drops below **P623**. First increase the value in **P237** if you need to increase the value in **P623**.

P624 Load Loss Compensation at Max. Delivery

P624	Range	0 ÷ 500	0 ÷ 50.0%
	Default	0	0.0%
	Level	BASIC	
	Address	974	
	Function	This parameter sets the reference increase percent implemented when the pumps run at their max. delivery. For example, when adjusting the pump pressure and the starting measure is known, when the flow delivery of the plant increases, the load loss in the ductwork increases as well, so the fluid pressure is weaker in the farthest distance. To obviate this problem, the pressure reference is increased in a linear way, based on the controlled delivery, up to the maximum delivery for which the increase percentage will be equal to **P624**.	

P625 Pump Reference with Enabled By-Pass

P625	Range	0 ÷ 1000	0 ÷ 100.0%
	Default	1000	100.0%
	Level	BASIC	
	Address	975	
	Function	This is the speed reference of the plant pumps when the by-pass is enabled; **C610** = [1: Yes].	

8.15. MUP Digital Outputs Menu

8.15.1. Overview

This menu includes the parameters required for the allocation of the control functions to the available digital outputs.

The output signal may be:
- specific to the Multipump application (MDO1 / 2 / 3 / 4);
- the same available for the standard Sinus Penta drive (MDO1 and MDO2 only).

By setting the parameters for signal selection (**P630** and **P632**) to [0: Function Mode], the digital outputs are set up via the parameters of the standard Sinus Penta drive (**P270** ÷ **P278** and **P279** ÷ **P287** respectively).
Specific settings for the Multipump application may be obtained when parameters **P630**, **P632**, **P634** and **P636** are set from 1 on (see Table 15).

8.15.2. List of Parameters P630 to P637

Table 14: List of parameters P630 to P637.

Parameter	FUNCTION	User Level	MODBUS Address
P630	MDO1: Signal Selection	ADVANCED	980
P631	MDO1: Output Logic Level	ADVANCED	981
P632	MDO2: Signal Selection	ADVANCED	982
P633	MDO2: Output Logic Level	ADVANCED	983
P634	MDO3: Signal Selection	ADVANCED	984
P635	MDO3: Output Logic Level	ADVANCED	985
P636	MDO4: Signal Selection	ADVANCED	986
P637	MDO4: Output Logic Level	ADVANCED	987

Table 15: List of the selectable signals for the MUP digital outputs.

Selectable value	Description
1	Inverter Run OK
2	Inverter OK On
3	Inverter OK Off
4	Inverter Run Alarm
5	PID Out Max
6	PID Out Min
7	Time Out Reg.
8	All Pumps On
9	Pump 2 On
10	Pump 3 On
11	Pump 4 On
12	Pump 5 On
13	Master MUP
14	Serial Comm. KO

P630 MDO1: Signal Selection

P630	Range	0 ÷ 14	0: [Function Mode] ÷ 14: [Serial Comm KO]
	Default	11	11:[Pump 4 On]
	Level	ADVANCED	
	Address	980	
	Function	Selection of the signal allocated to MDO1 digital output (transistor open collector output). MDO1 is factory-set to start Pump 4. 0: Function Mode → MDO1 will implement the function programmed in the Digital Outputs Menu (**P270 ÷ P278**; see the Digital Outputs Menu in the Sinus Penta's Programming Instructions manual). **1 ÷ 14** → see Table 15 Functions **1** to **6** are detailed in the Digital Outputs Menu in the Sinus Penta's Programming Instructions manual. 7: Time Out Reg. → Activation of the adjusting timeout (see the Adjusting Timeout Menu, **P615** – **P617**). 8: All Pumps On → All pumps are ON. 9: Pump 2 On → Start Slave P2 command (pump 2 starts up). 10: Pump 3 On → Start Slave P3 command (pump 3 starts up). 11: Pump 4 On → Start Slave P4 command (pump 4 starts up). 12: Pump 5 On → Start Slave P5 command (pump 5 starts up). 13: Master MUP → Warning from Master MUP drive. When two Multipump drives are installed in the same plant, this signal indicates which drive is the Master drive controlling the plant (Master MUP = On signal) and which drive is the slave drive. See Multimaster Wiring Diagram (2 MUP Drives). 14: Serial Comm. KO → Serial communications to the slave drive failed (set as 9:Serial Link in **C615** – **C618**). No drive programmed for the control via serial link responds to the queries sent from the Multipump master.	

NOTE

When the digital output configured as Master Multipump is activated, if the drive detects that the Slave Multipump digital input is activated, alarm "A124 Master Conflict" will trip, because a conflict is occurring between the two Multipump drives installed in the plant (both drives are operating as Master drives). Check programming and wiring of the digital inputs/outputs set as Slave/Master Multipump for both drives implementing the MUP firmware.

NOTE

When controlling a contactor, an additional relay (Vmax=48V and Imax=50mA) is required.

P631 MDO1: Output Logic Level

P631	Range	0 ÷ 1	0: [False] ÷ 1: [True]
	Default	1	1: [True]
	Level	ADVANCED	
	Address	981	
	Function	Logic of the digital signal allocated to MDO1 (false or true).	

P632 MDO2: Signal Selection

P632	Range	0 ÷ 14	0: [Function Mode] ÷ 14: [Serial Comm KO]
	Default	12	12: [Pump 5 On]
	Level	ADVANCED	
	Address	982	
	Function	Selection of the signal allocated to MDO2 digital output (transistor push-pull output). MDO2 is factory-set to start Pump 5. When a contactor is to be controlled, an additional relay (Vmax=48V and Imax=50mA) is required. The selectable functions are given in the description of parameter **P630**. 0: Function Mode → MDO2 will perform the function programmed in the Digital Outputs Menu (**P279 ÷ P287**, see the Digital Outputs Menu in the Sinus Penta's Programming Instructions manual).	

NOTE When controlling a contactor, an additional relay (Vmax=48V and Imax=50mA) is required.

P633 MDO2: Output Logic Level

P633	Range	0 ÷ 1	0: [False] ÷ 1: [True]
	Default	1	1: [True]
	Level	ADVANCED	
	Address	983	
	Function	Logic of the digital signal allocated to MDO2 (false or true).	

P634 MDO3: Signal Selection

P634	Range	0 ÷ 14	0: [Disabled] ÷ 14: [Serial Comm KO]
	Default	9	9: [Pump 2 On]
	Level	ADVANCED	
	Address	984	
	Function	Selection of the signal allocated to MDO3 digital output (relay output). MDO3 is factory-set to start Pump 2. The selectable functions are given in the description of parameter **P630**, except for 0:[Function Mode], which is not available for relay outputs.	

P635 MDO3: Output Logic Level

P635	Range	0 ÷ 1	0: [False] ÷ 1: [True]
	Default	1	1: [True]
	Level	ADVANCED	
	Address	985	
	Function	Logic of the digital signal allocated to MDO3 (false or true).	

P636 MDO4: Signal Selection

P636	Range	0 ÷ 14	0: [Disabled] ÷ 14: [Serial Comm KO]
	Default	10	10: [Pump 3 On]
	Level	ADVANCED	
	Address	986	
	Function	Selection of the signal allocated to MDO4 digital output (relay output). MDO4 is factory-set to start Pump 3. The selectable functions are given in the description of parameter **P630**, except for 0:[Function Mode], which is not available for relay outputs.	

P637 MDO4: Output Logic Level

P637	Range	0 ÷ 1	0: [False] ÷ 1: [True]
	Default	1	1: [True]
	Level	ADVANCED	
	Address	987	
	Function	Logic of the digital signal allocated to MDO4 (false or true).	

8.16. Multireferences Menu

8.16.1. Overview

This menu includes the parameters required for using and allocating the multireferences sent from the digital inputs.
The source of the reference sent to the Manager drive of the Multipump plant is defined by the settings in parameters **C285-C287** (see the PID Configuration Menu in the Sinus Penta's **Programming Instructions** manual). The global reference sent to the Manager drive also depends on preset multireferences or the reduction percent of the reference. Configuration example:

PID Configuration Menu

C285 PID Source of Reference 1 = 2: AIN1
C286 PID Source of Reference 2 = 0: Disable
C287 PID Source of Reference 3 = 0: Disable

MUP Digital Inputs

C619 Multireference 1 = 7: MDI7
C620 Multireference 2 = 8: MDI8
C621 Multireference 3 = 0: Disable

Multireference Menu

P641 Reference 1 (Mref 1) = 1.0 bars
P642 Reference 2 (Mref 2) = 1.5 bars
P643 Reference 3 (Mref 3) = 2.5 bars

PID Parameters Menu

P257 Gain for PID Scaling = 0.1
When AIN1 is at 100%, this corresponds to a pressure reference of 10 bars
(100%***P257** =10.0).

Supposing that AIN1 is 10%, the following references are obtained when considering the combinations of the digital inputs programmed as multireference and the function allocated through parameter **P640**:

P640 Multireference Function = Preset Ref.		
MDI8	MDI7	Global Reference
0	0	1.0 bars
0	1	1.0 bars
1	0	1.5 bars
1	1	2.5 bars

If both digital inputs set as Multireference are inactive, the global reference is given from AIN1 analogue input selected as Reference 1 for PID regulator (**C285**):

P640 Multireference Function = Exclusive Preset Ref.		
MDI8	MDI7	Global Reference
0	0	0.0 bars
0	1	1.0 bars
1	0	1.5 bars
1	1	2.5 bars

When no Multireference is active, the global reference is null:

P640 Multireference Function = Sum Ref.		
MDI8	MDI7	Global Reference
0	0	1.0 bars
0	1	2.0 bars
1	0	2.5 bars
1	1	3.5 bars

If both the digital inputs set as Multireference are inactive, the global reference is given from AIN1 analogue input selected as Reference 1 for PID regulator (**C285**). When at least one of the digital inputs set as Multireference is active, the reference results from the sum of the value given from AIN1 and the value given from the selected Multireference.

8.16.2. List of Parameters P640 to P647

Table 16: List of parameters P640 to P647.

Parameter	FUNCTION	User Level	MODBUS Address
P640	Multireference Function	ENGINEERING	990
P641	Multireference 1 (Mref1)	ENGINEERING	991
P642	Multireference 2 (Mref2)	ENGINEERING	992
P643	Multireference 3 (Mref3)	ENGINEERING	993
P644	Multireference 4 (Mref4)	ENGINEERING	994
P645	Multireference 5 (Mref5)	ENGINEERING	995
P646	Multireference 6 (Mref6)	ENGINEERING	996
P647	Multireference 7 (Mref7)	ENGINEERING	997

<u>P640 Multireference Function</u>

P640			
	Range	0 ÷ 2	0: [Preset Ref] ÷2: [Exclusive Preset Ref.]
	Default	0	0: [Preset Ref]
	Level	ENGINEERING	
	Address	990	
	Function	This parameter sets whether the reference due to the selection of a digital multireference is to be considered as a unique active reference or shall be summed up to the other programmed reference sources (see the example given in the Overview section above).	

P641 Multireference 1

P641	Range	–1000 ÷ +1000	–1000 ÷ +1000
	Default	0	0
	Level	ENGINEERING	
	Address	991	
	Function	This is the value of the reference selected with the corresponding combination of the digital inputs set as Multireference. The reference is expressed in the preset unit of measure (see the Display Menu in the Sinus Penta's **Programming Instructions** manual) and is based on parameter **P257**, Gain for PID Scaling. Example: the maximum PID feedback is 100%, corresponding to a level of 25m in a tank. If **P257** = 0.25, 100% feedback corresponds to 25 metres. If a reference level of 15 metres shall be programmed for multireference 1, **P641** = 15.0 m.	

P642 Multireference 2

P642	Range	–1000 ÷ +1000	–1000 ÷ +1000
	Default	0	0
	Level	ENGINEERING	
	Address	992	
	Function	This is the value of the reference selected with the corresponding combination of the digital inputs set as Multireference.	

P643 Multireference 3

P643	Range	–1000 ÷ +1000	–1000 ÷ +1000
	Default	0	0
	Level	ENGINEERING	
	Address	993	
	Function	This is the value of the reference selected with the corresponding combination of the digital inputs set as Multireference.	

P644 Multireference 4

P644	Range	–1000 ÷ +1000	–1000 ÷ +1000
	Default	0	0
	Level	ENGINEERING	
	Address	994	
	Function	This is the value of the reference selected with the corresponding combination of the digital inputs set as Multireference.	

P645 Multireference 5

P645	Range	–1000 ÷ +1000	–1000 ÷ +1000
	Default	0	0
	Level	ENGINEERING	
	Address	995	
	Function	This is the value of the reference selected with the corresponding combination of the digital inputs set as Multireference.	

P646 Multireference 6

P646	Range	–1000 ÷ +1000	–1000 ÷ +1000
	Default	0	0
	Level	ENGINEERING	
	Address	996	
	Function	This is the value of the reference selected with the corresponding combination of the digital inputs set as Multireference.	

P647 Multireference 7

P647	Range	–1000 ÷ +1000	–1000 ÷ +1000
	Default	0	0
	Level	ENGINEERING	
	Address	997	
	Function	This is the value of the reference selected with the corresponding combination of the digital inputs set as Multireference.	

8.17. Alarms for the Multipump Application

8.17.1. Overview

This section covers the alarms relating to the Multipump application.
The exhaustive fault list for Sinus Penta drives is given in the Programming Instructions manual.

8.17.2. Alarm Code List

Table 17: List of the alarm codes relating to the Multipump application.

Alarm	Message	Description
A121	DLX Master Not On	Failure in Master drive serial communications
A122	DLX Timeout	Timeout from serial link detected by Master drive
A123	DLX Error	Serial communications error detected by Master drive
A124	Master Conflict	Two drives implementing the Multipump software are both operating as the Master drive

A121 DLX Master Not On

A121	Description	Failure in the Master drive serial communications.
	Event	Not defined.
	Possible Cause	Strong electromagnetic disturbance. Possible failure in the microcontroller or in other circuits in the control board.
	Solution	1. Reset the alarm. 2. If the alarm persists, please contact ELETTRONICA SANTERNO's CUSTOMER SERVICE.

A122 DLX Timeout

A122	Description	The Master drive has detected a timeout from serial communications.
	Event	The Slave drives did not respond for a time > 2 seconds to the queries sent via Modbus.
	Possible Cause	Incorrect setting or wiring.
	Solution	Check setting and wiring of the Master drive and the Slave drives.

A123 DLX Error

A123	Description	The Master drive has detected a serial communications error.
	Event	The Slave drives have sent inconsistent responses to the queries sent via Modbus.
	Possible Cause	Incorrect setting or wiring.
	Solution	Check setting and wiring of the Master drive and the Slave drives.

A124 Master Conflict

A124	Description	The digital output configured as Master Multipump is activated and the drive detects that the Slave Multipump digital input is activated.
	Event	Conflict between the two Multipump drives, which are both operating as Master drives.
	Possible Cause	Incorrect setting or wiring.
	Solution	Check setting and wiring of the digital input/outputs programmed as Slave/Master Multipump in both drives implementing the MUP firmware.

8.17.3. LIST OF THE DRIVECOM ALARM CODES

If a PROFIdrive expansion board is used (see the Sinus Penta's Installation Instructions and Programming Instructions manuals), the Sinus Penta fault codes are coded according to the DRIVECOM communication profile. The alarms specific to the Multipump application are detailed below.
The alarms that are not covered in this section are given in the Sinus Penta's Programming Instructions manual.

The specific code is readable @ address 947 of the specific PROFIDRIVE PARAMETERS (see PROFIdrive COMMUNICATIONS BOARD USER MANUAL).

The DRIVECOM User Group e.V. is an association of international drive manufacturers, universities, and institutes. It has set itself a goal to develop a simple integration of drives in open automation systems. The DRIVECOM User Group therefore decided to standardise the industrial drive communication interface.

Also visit www.drivecom.org.

Table 18: List of the DRIVECOM alarm codes specific to the Multipump application.

Code	Meaning	Sinus Penta Fault	#
7510	Serial interface No. 1	DLX Master Not On	A121
		DLX Timeout	A122
		DLX Error	A123
		Conflict Master	A124

8.18. Warnings Specific to the Multipump Application

8.18.1. OVERVIEW

This section covers the warnings specific to the Multipump application.
The warnings that are not covered in this section are given in the Sinus Penta's Programming Instructions manual.

8.18.2. WARNING LIST

Table 19: List of the warnings specific to the Multipump application.

Warning	Message	Description
W47	SERIAL TIMEOUT	Loss of the master-slave connection in case of control via serial link

9. PARAMETERS IN COMMON WITH THE STANDARD SINUS PENTA BUT HAVING DIFFERENT MODBUS ADDRESSES

Table 20: List of the parameters in common with the standard Sinus Penta but having different Modbus addresses.

Parameter	FUNCTION	PD MODBUS Address	PM MODBUS Address
P277a	MDO1: Selecting variable C	642	620
P277b	MDO1: Function applied to the result of f(A,B) C	643	621
P286a	MDO2: Selecting variable C	644	622
P286b	MDO2: Function applied to the result of f(A,B) C	645	623
P350	MPL1: Digital output mode	950	680
P351	MPL1: Selecting variable A	951	681
P352	MPL1: Selecting variable B	952	682
P353	MPL1: Testing variable A	953	683
P354	MPL1: Testing variable B	954	684
P355	MPL1: Comparing value for Test A	955	685
P356	MPL1: Comparing value for Test B	956	686
P357	MPL1: Function applied to the result of the 2 tests	957	687
P357a	MPL1: Selecting variable C	932	624
P357b	MPL1: Function applied to the result of f(A,B) C	933	625
P358	MPL1: Output logic level	958	688
P359	MPL2: Digital output mode	959	689
P360	MPL2: Selecting variable A	960	690
P361	MPL2: Selecting variable B	961	691
P362	MPL2: Testing variable A	962	692
P363	MPL2: Testing variable B	963	693
P364	MPL2: Comparing value for Test A	964	694
P365	MPL2: Comparing value for Test B	965	695
P366	MPL2: Function applied to the result of the 2 tests	966	696
P366a	MPL2: Selecting variable C	934	626
P366b	MPL2: Function applied to the result of f(A,B) C	935	627
P367	MPL2: Output logic level	967	697
P368	MPL3: Digital output mode	968	733
P369	MPL3: Selecting variable A	969	734
P370	MPL3: Selecting variable B	970	735
P371	MPL3: Testing variable A	971	736
P372	MPL3: Testing variable B	972	737
P373	MPL3: Comparing value for Test A	973	738
P374	MPL3: Comparing value for Test B	974	739
P375	MPL3: Function applied to the result of the 2 tests	975	740
P375a	MPL3: Selecting variable C	936	628
P375b	MPL3: Function applied to the result of f(A,B) C	937	629
P376	MPL3: Output logic level	976	741

Parameter	FUNCTION	PD MODBUS Address	PM MODBUS Address
P377	MPL4: Digital output mode	977	742
P378	MPL4: Selecting variable A	978	743
P379	MPL4: Selecting variable B	979	744
P380	MPL4: Testing variable A	980	745
P381	MPL4: Testing variable B	981	746
P382	MPL4: Comparing value for Test A	982	747
P383	MPL4: Comparing value for Test B	983	748
P384	MPL4: Function applied to the result of the 2 tests	984	749
P384a	MPL4: Selecting variable C	938	630
P384b	MPL4: Function applied to the result of f(A,B) C	939	631
P385	MPL4: Output logic level	985	750
P390	Type of signal over XAIN4 input	990	766
P391	Value of XAIN4 input generating min. reference	991	767
P392	Value of XAIN4 input generating max. reference	992	768
P393	Offset over XAIN4 input	993	769
P394	Filtering time over XAIN4 input	994	770
P395	Type of signal over XAIN5 input	995	771
P396	Value of XAIN5 input generating min. reference	996	772
P397	Value of XAIN5 input generating max. reference	997	773
P398	Offset over XAIN5 input	998	774
P399	Filtering time over XAIN5 input	999	775
C310	Day of the week to be changed	1237	1053
C311	Day of the month to be changed	1238	1054
C312	Month to be changed	1239	1055
C313	Year to be changed	1240	1056
C314	Hour to be changed	1241	1057
C315	Minutes to be changed	1242	1058
C316	Clock/calendar change command	1244	1060